Shoreline Signs

PUBLIC ACCESS SIGNAGE GUIDELINES

August 2005

San Francisco Bay Conservation and Development Commission

This publication was prepared with financial assistance from the National Oceanic and Atmospheric Administration's Coastal Impact Assistance Program.

ABOUT BCDC

The 27-member San Francisco Bay Conservation and Development Commission (BCDC) was created by the California Legislature in 1965 in response to broad public concern over the future of the San Francisco Bay. The Commission is made up of appointees of the California Governor and Legislature, local governments and state and federal agencies. The Commission is charged with:

- Regulating all filling and dredging in the San Francisco Bay.
- Regulating new development within the first 100 feet inland from the Bay shoreline to ensure that the maximum feasible public access to the Bay is provided.
- Protecting the Suisun Marsh -- the largest remaining wetland in California.
- Minimizing pressures to fill the Bay by ensuring that the limited amount of shoreline area suitable for high priority water-oriented use is reserved for ports, water-related industries, water-oriented recreation, airports and wildlife refuges.
- Pursuing an active planning program to study Bay issues so that Commission plans and policies are based upon the best available current information.
- Administering the federal Coastal Zone Management Act with the San Francisco Bay segment of the California coastal zone to ensure that federal activities reflect Commission policies.
- Participating in the regionwide state and federal Long-Term Management Strategy (LTMS) for dredging and dredge material disposal in the San Francisco Bay.
- Participating in California's oil spill prevention and response program.

For more information about BCDC or to obtain copies of this document, please contact:

San Francisco Bay Conservation and Development Commission
50 California Street, Suite 2600
San Francisco, California 94111
Phone: (415) 352-3600
www.bcdc.ca.gov
e-mail: info@bcdc.ca.gov

Project Staff: Joe LaClair, Senior Planner
Brad McCrea, Bay Design Analyst
Hunt Design Associates, Graphic Design Consultants

Purpose of the Sign Program

The San Francisco Bay Conservation and Development Commission is responsible for ensuring that development projects within its jurisdiction provide maximum feasible public access to the shoreline and waters of San Francisco Bay. Part of that responsibility is to ensure that clear and understandable signs are posted in public access areas that:

- inform the public where public access areas are located and how to reach them, including parking;
- describe what recreational opportunities are available nearby;
- describe how the public can use the area, consistent with rules governing appropriate behavior; and
- provide interpretation of natural, historic and cultural features in or near the public access area.

The purpose of this handbook is to provide the San Francisco Bay region with guidelines for signs used at public access areas that are part of development projects along the shoreline of San Francisco Bay. These guidelines provide detailed suggestions for the design and installation of signs to assist Commission permit holders in meeting the signage requirements specified in Commission permits.

Signs of various kinds have been posted in shoreline public access areas for years. The designs have changed over time. The designs included in these guidelines establish the next step in the evolution of shoreline signage. This guide provides a consistent and comprehensive approach to the design of shoreline signage so that the public can more easily find and enjoy public access areas. For this reason, these guidelines have been coordinated with those of the San Francisco Bay Trail Project so that shoreline signage can be informative and attractive without diminishing the visual qualities of the Bay and its shoreline.

Although the public access design guidelines are advisory, they are intended to be used consistently in public access areas around the Bay as readily recognizable signs that inform visitors that an area is open to the public. The guidelines reflect past recommendations of BCDC's Design Review Board and formal decisions by the Commission and are based on the *San Francisco Bay Plan* policies.

How to Use this Document

Most Commission permits that require the provision of public access include requirements for signage that is intended to help the public find and use the public access. Permit holders and their design professionals can use this guide to develop a comprehensive sign program for required public access areas. The public, permit holders and design professionals can use this guide to determine the types of signs needed to make shoreline public access areas easy to use.

Where to Get the Signs

The signs shown in these guidelines can be fabricated by most sign manufacturers. Artwork and design templates for many of the signs shown here are available from the BCDC at 415-352-3600. For information about sign fabrication and specifications, see page 16.

Contents

Public Shore Sign - Design	**2**
Public Shore Sign - Use	**3**
Signage Types	**4**
Parking Identification Signs	**5**
Directional Signs	**6**
Regulatory Signs	**7**
Informational Signs	**8**
Regulatory/Informational Buoy	**9**
Interpretive Signs	**10**
Area Maps	**11**
Sign Placement Guide - Large Sites	**12**
Sign Placement Guide - Small Sites	**13**
Graphic Standards - Fonts & Icons	**14**
Graphic Standards - Colors	**15**
Sign Fabrication & Mounting	**16**

Public Shore Sign - Design

The Public Shore sign serves as the centerpiece of the BCDC sign program. The design emphasizes bold lettering for quick reading, while offering flexibility for adding other necessary information. The Public Shore sign is designed to work individually, or in conjunction with other agency signs, such as the San Francisco Bay Trail Project, the California Coastal Conservancy, the San Francisco Bay Water Trail and the San Francisco Bay Area Ridge Trail.

Use of the Public Shore Sign Design

It is important that the Public Shore Sign appear the same way in every application so that public access areas are easily identifiable by members of the public.

Size Selection

It is important to select and install signs that are in scale with the environment. There are three preferred sizes of the Public Shore Logo Sign: 18", 12" and 3".

The Bay Trail Sign

The San Francisco Bay Trail Sign should be located within BCDC public access areas when the Bay Trail passes through the public access area. For the graphic design standards of the Bay Trail Sign, contact San Francisco Bay Trail Project at (510) 464-7900.

18"

Use this large size for major, distance-view locations, such as trail heads located long distances from parking areas.

This wording appears on many Public Shore signs, centered at the bottom of the panel.

The typeface is Frutiger Bold Condensed.
On 18" signs, the font size is 30 pt.
On 12" signs, the font size is 20 pt.
Do not display the text on 3" signs.

12"

Use this medium size for intermittent trail and shoreline marking in developed areas.

Use this small size for narrow trails and when other design elements are small or in rustic and rural areas.

3"

When placement of Bay Trails signs is required, consult with BCDC and Bay Trail Project staff to coordinate placement of Public Shore and Bay Trail signs.

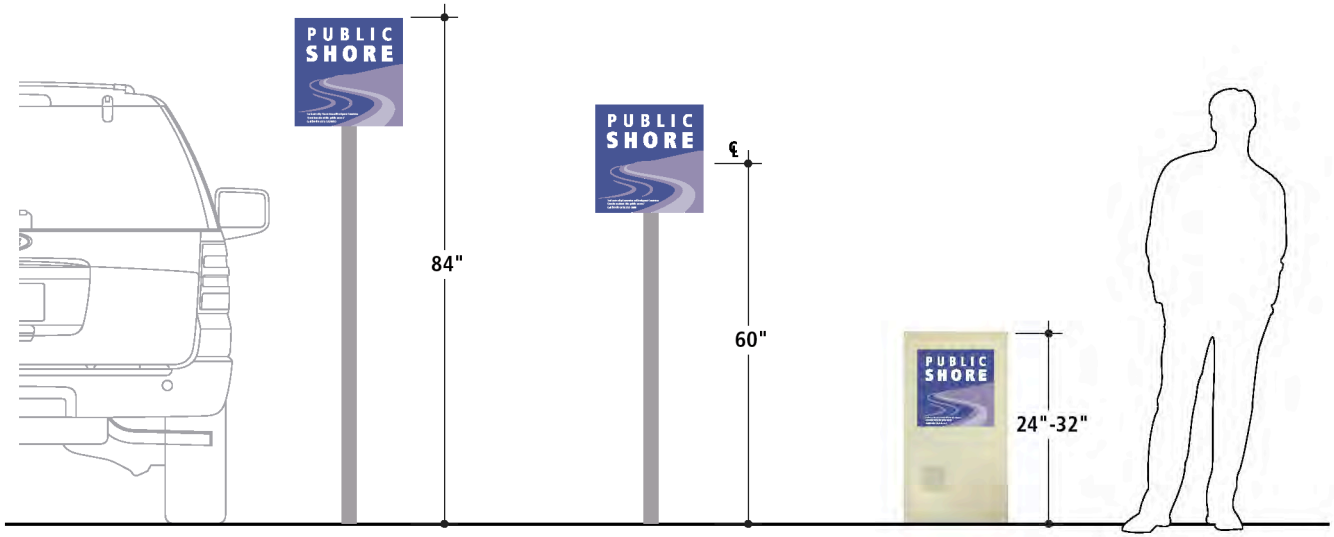

Signs may be mounted on high or low posts or other sign bases.

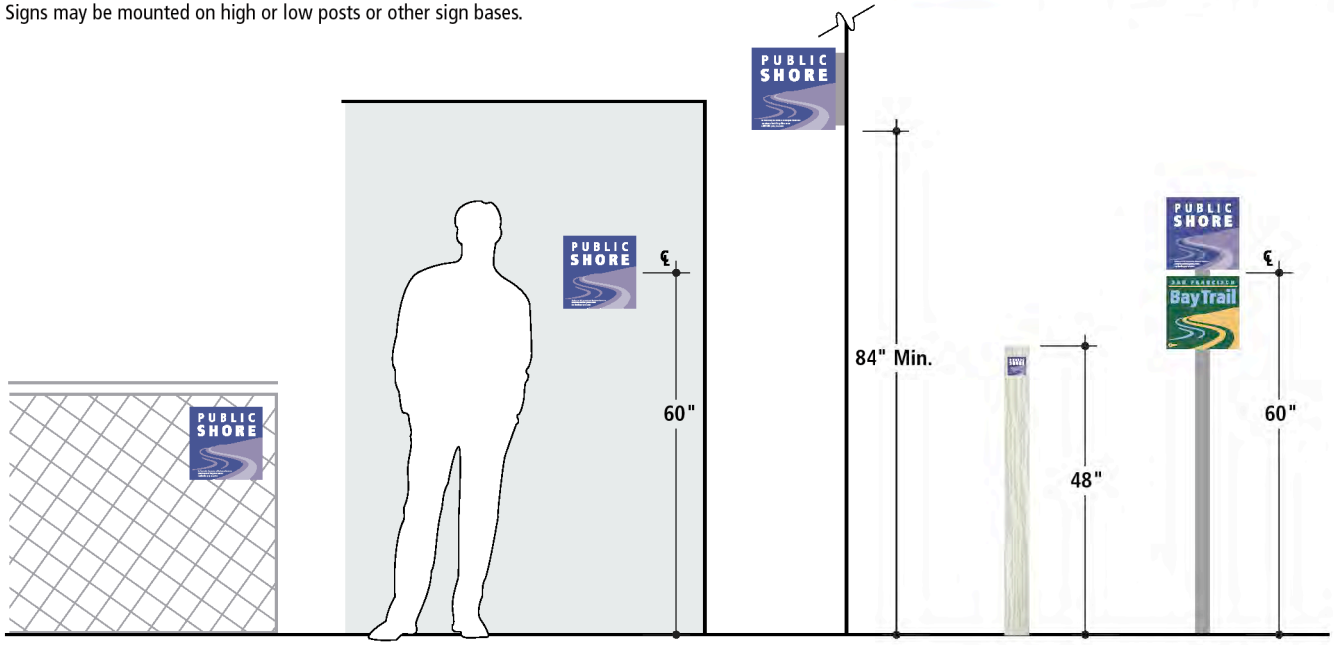

Signs may be mounted on fences or walls or projected off surfaces (blade-mounted). The small sign may be mounted at the top of square posts. The Public Shore Sign may share a post with the San Francisco Bay Trail sign, or other signs.

Public Shore Sign - Use

Purpose

This is the primary sign to denote a public access area required by BCDC. Install at entrances to Public Shore areas and at key places along the shoreline.

The Public Shore Identification Sign may also be installed on posts with other existing or proposed signs, for example, those identifying project names or providing directions into a project.

Description

Square sign panel.

Sign Materials

Public Shore signs may be made of any one of a variety of rigid, durable materials, including: silk-screened on aluminum, acrylic, or digitally printed. See Page 16, Sign Fabricating & Mounting for more information regarding materials.

Do not hand paint or hand letter signs.

Sign Fabrication & Mounting

See Page 16, Sign Fabrication & Mounting, for information on sign-making techniques and installation. Mounting heights shown are preferred. Consult with BCDC staff for deviations from these heights.

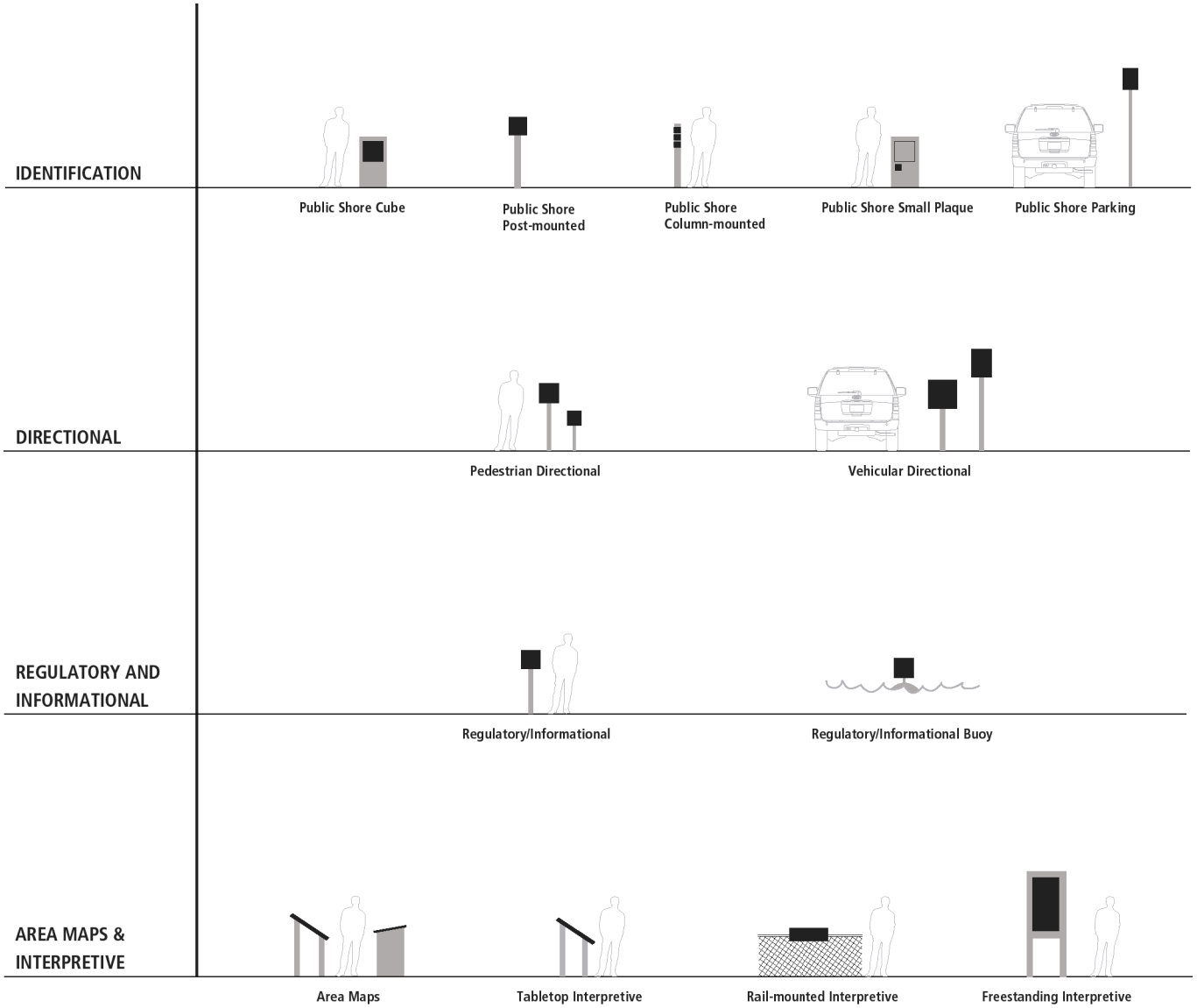

Signage Types

Official "Menu" of Signs

Several kinds of signs have been designed to work together in various combinations to communicate a unified Public Shore message on various sites and facilities. Shown here is the complete inventory of sign types. Implementation guidelines and details for each type are shown on the pages that follow.

Creating New Sign Types

The Shoreline Sign Program attempts to provide formats for all anticipated public communication needs. However, should additional sign types be needed, the formats and details presented in this manual should be used. New sign types and designs should be developed in consultation with BCDC staff.

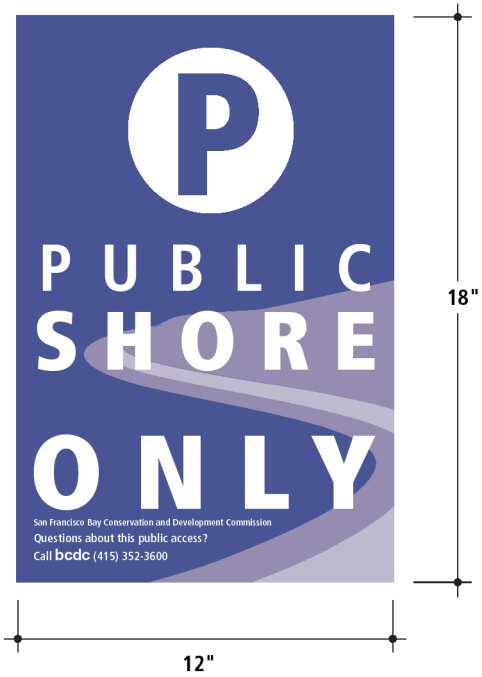

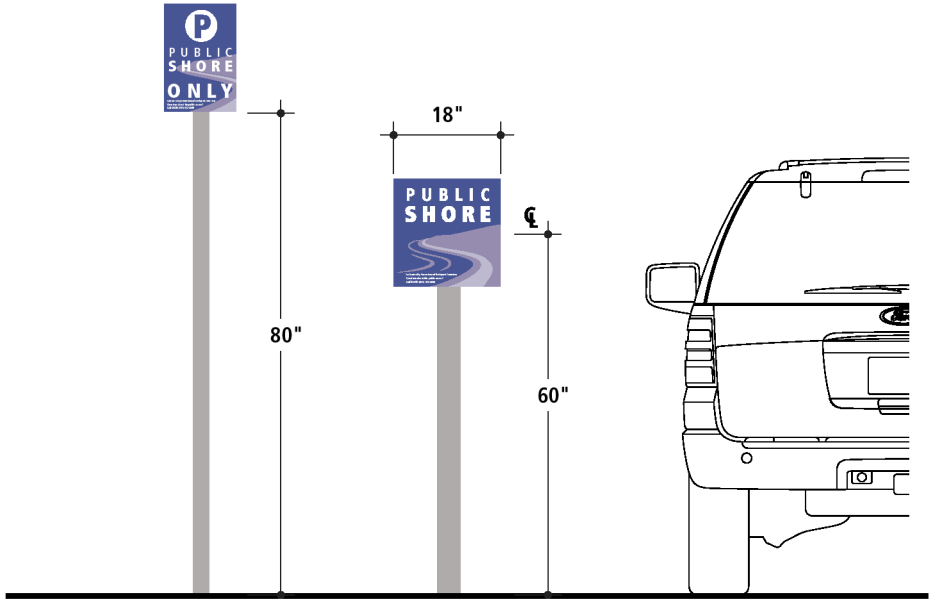

Parking signs may be 18" or 12" wide and may be mounted on metal posts of various heights, as appropriate.

Parking Identification Signs

Purpose
Install where needed to identify dedicated Public Shore parking spaces or areas to motorists.

Description
Square or rectangular sign panels.

Information Content
Public Shore Graphic Background, BCDC information line, words PARKING ONLY or the P Symbol.

Sign Materials
Public Shore signs may be made of any one of a variety of rigid, durable materials, including: silk-screened on aluminum, acrylic, or digitally printed. See Page 16, Sign Fabricating & Mounting for more information regarding materials.

Do not hand paint or hand letter signs.

Sign Fabrication & Mounting
See Page 16, Sign Fabrication & Mounting, for information on sign-making techniques and installation.

Always center the arrow left-to-right on the panel.

Always use the Public Shore Arrow.

Directional signs may be 18" or 12" wide and may be mounted on posts of various heights, as appropriate.

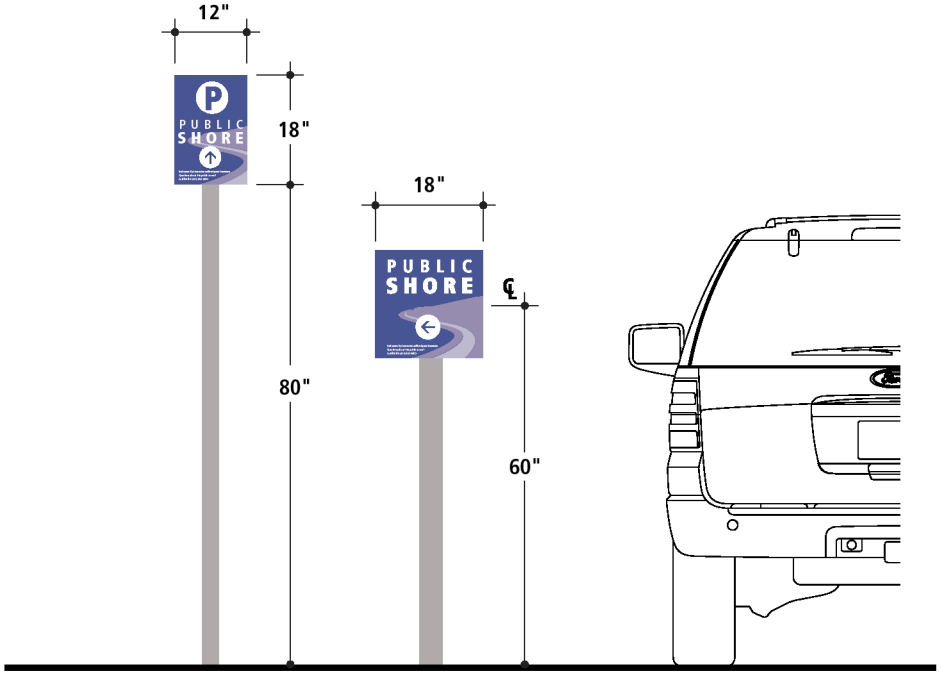

Directional Signs

Purpose
Install where needed to communicate the directions to motorists, pedestrians or bicyclists.

The Public Shore Directional Sign may also be installed on posts with other existing or proposed signs, for example, those identifying project names or providing directions into a project.

Description
Square or rectangular sign panels.

Information Content
Public Shore Graphic Background, including BCDC information line, symbol and a directional arrow. This format may be used for signs directing to the public shore, parking, restrooms or ancillary destinations.

Sign Materials
Public Shore signs may be made of any one of a variety of rigid, durable materials, including: silk-screened on aluminum, acrylic, or digitally printed. See Page 16, Sign Fabricating & Mounting for more information regarding materials.

Do not hand paint or hand letter signs.

Sign Fabrication & Mounting
See Page 16, Sign Fabrication & Mounting, for information on sign-making techniques and installation.

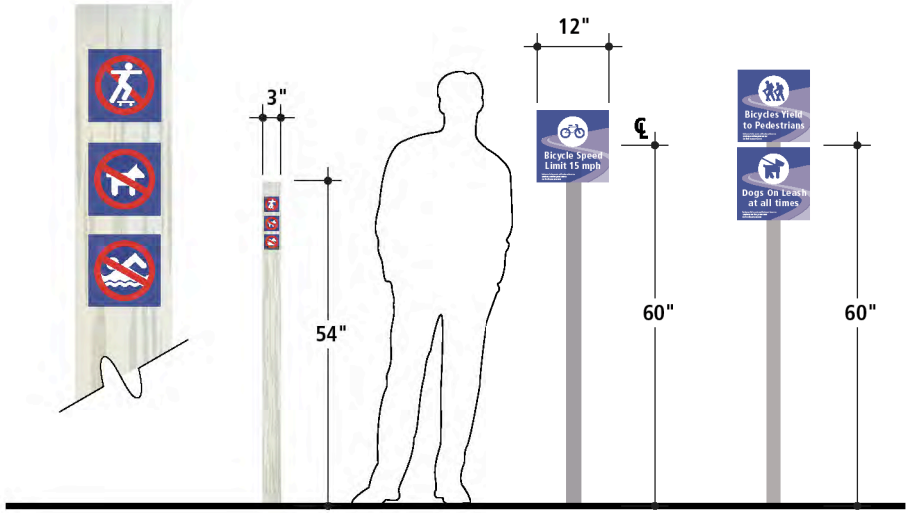

Standard regulatory signs should be 12" wide and may be mounted on posts of various heights, as appropriate. Small icon-only signs of 3" may be grouped together on posts.

Regulatory Signs

Purpose
Install where needed to communicate behavior rules and expectations.

Public Shore Regulatory Signs may also be installed on posts with other existing or proposed signs, for example, those providing directions into a project.

Description
Square sign panel.

Information Content
Public Shore graphic background, including BCDC information line, and a Standard Symbol. Use a red circle and slash to show prohibited behaviors.

Sign Materials
Public Shore signs may be made of any one of a variety of rigid, durable materials, including: silk-screened on aluminum, acrylic, or digitally printed. See Page 16, Sign Fabricating & Mounting for more information regarding materials.

Do not hand paint or hand letter signs.

Sign Fabrication & Mounting
See Page 16, Sign Fabrication & Mounting, for information on sign-making techniques and installation.

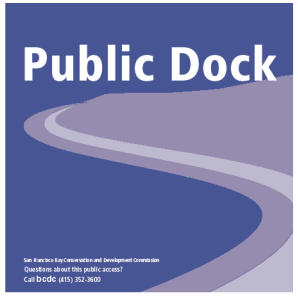

Specifications for the Wildlife Viewing sign are available at Caltrans website: www.dot.ca.gov

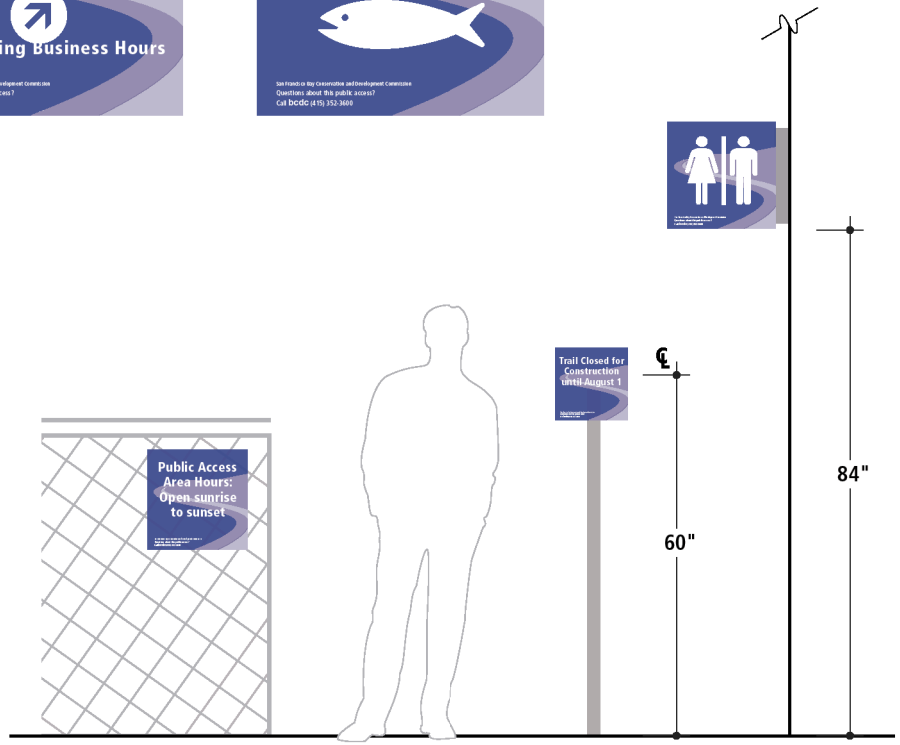

Information signs may be 12" or 18" wide and may be mounted on posts of various heights, as appropriate.

Informational Signs

Purpose
Install where needed to communicate general information.

Public Shore Information Signs may also be installed on posts with other existing or proposed signs, for example, those providing directions into a project.

Description
Square sign panel.

Information Content
Public Shore graphic background, including BCDC information line, and text to come.

Sign Materials
Public Shore signs may be made of any one of a variety of rigid, durable materials, including: silk-screened on aluminum, acrylic, or digitally printed. See Page 16, Sign Fabricating & Mounting for more information regarding materials.

Do not hand paint or hand letter signs.

Sign Fabrication & Mounting
See Page 16, Sign Fabrication & Mounting, for information on sign-making techniques and installation.

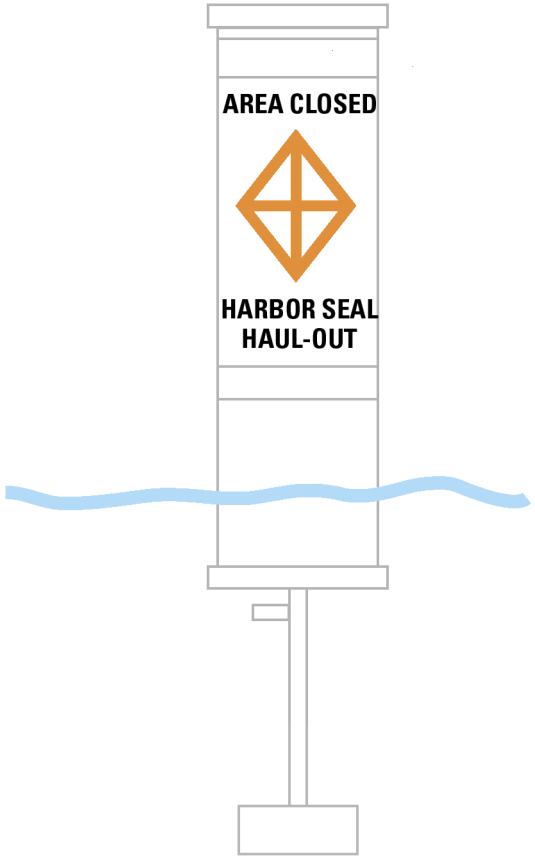

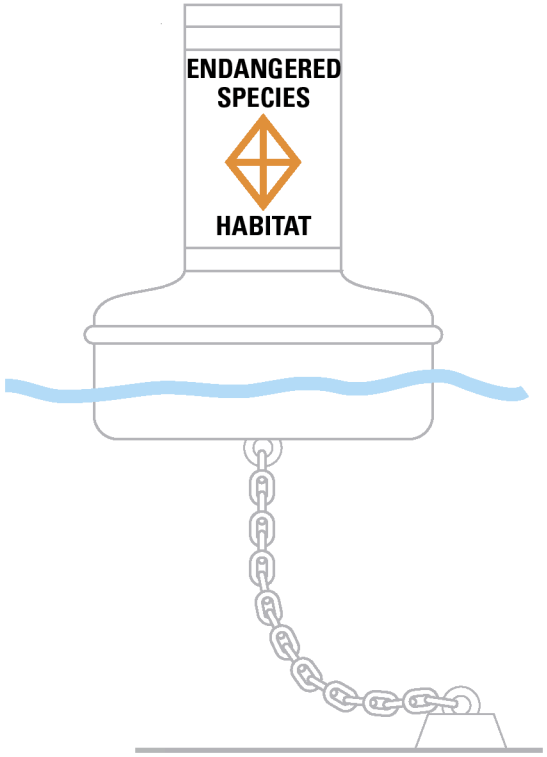

Letter height should be 3" or as large as space permits.

Regulatory/Informational Buoy

Purpose
Install where needed in the Bay. Must follow Coast Guard regulations for proper placement and spacing of buoys.

Description
Standard IURD tub-type buoy.

Notes
Do not place Public Shore Sign or any other logo on buoy.

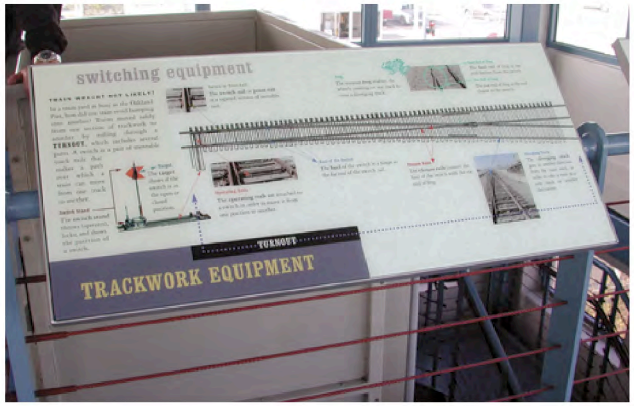

Appropriate and interesting writing of text on interpretive signs is important. Engage a professional writer to create short compelling paragraphs, whenever possible.

Illustrations can vary from historic photographs to specially commissioned illustrations or diagrams. Color can be an effective tool for organizing information and attracting attention.

Panel design and layout is best kept simple with a short topical headline or title placed at the top and illustrations and text are arranged below, "magazine" style. Short captions for the illustrations can enhance interest and engage the reader.

Interpretive signs describing natural features can support regulatory signage.

Representative design and typographic guidelines as well as good examples of interpretive signs are available from the National Park Service at www.nps.gov/hfc/products/waysides/contents/htm.

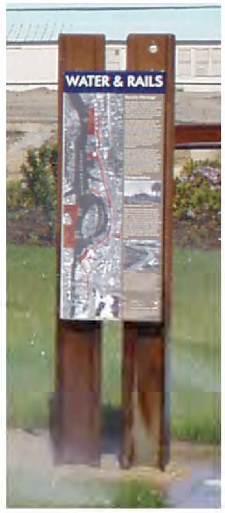

Interpretive signs should be designed to ensure that people with disabilities or those speaking other languages, including Braille, can understand the message. For assistance in designing accessible signs, please see **The Smithsonian Guidelines on Accessible Exhibition Design** at www.si.edu

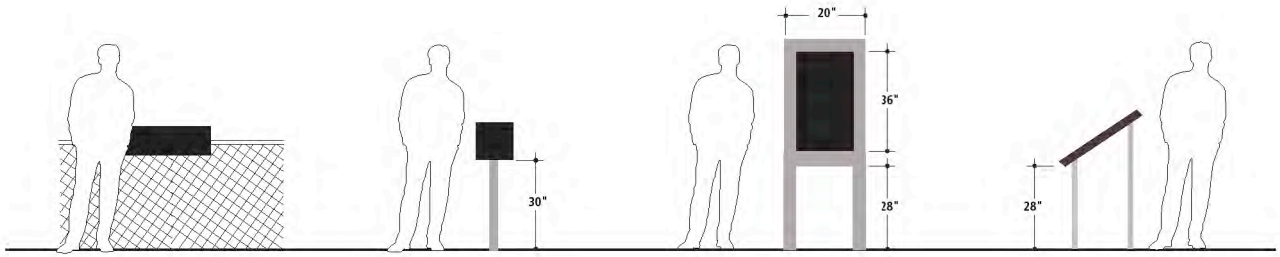

Interpretive Signs

Description

Interpretive signage is permanently posted information about local history, natural features or events that enhance the visitor experience. Developers and operators of publicly accessible shoreline properties are encouraged to create and implement such displays, thereby adding value to public shore visits.

Content Guidelines

The best interpretive displays are usually based on a series of simple, but inter-related topics or stories. Each individual display should focus on a single topic; a series of closely located displays can illuminate a various aspects of a subject. For example, two or three displays at a point or landing can present related single topics such as origin of the point's name, its commercial history and its military relevance.

Design Guidelines

Interpretive planners have found that illustrated panels, mounted on posts and parallel to a pedestrian path, is the most effective way of attracting usage. This "wayside" design approach is found in national parks and historic sites throughout the U.S. Panels are mounted low and at an angle to allow viewing while not disturbing the scenic view.

Examples of well-designed maps.

Representative design and typographic guidelines as well as good examples of maps are available from the National Park Service at www.nps.gov/hfc/products/waysides/contents/htm.

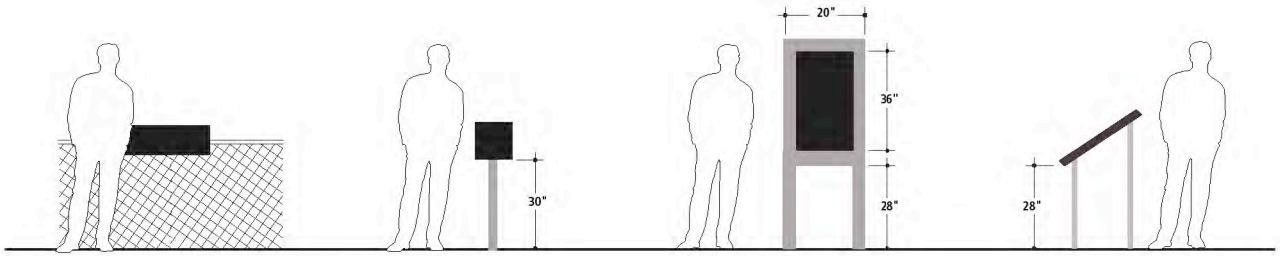

Area Maps

Purpose

Area maps help visitors find the way along the shoreline. Designed correctly, maps can enhance a public shore visit by presenting geographic context. All developers and operators of publicly accessible shoreline properties are encouraged to create and install area maps.

Content Guidelines

Area maps should be centered on the site where the map is located, should describe the shoreline and immediate inland areas within an approximately three to five mile radius of the site, should include points of interest that fall within the area of the map and a small key map or overview of the larger area, highlighting the area shown on the main map. Maps should have a scale and provide information about walking times and distances to points of interest.

Design Guidelines

A simple, clear art style is best with bold lines for trails. Incorporate symbols or pictographs where possible to reinforce meaning.

Accessibility Guidelines

Lettering should be clear and large enough for reading by most people.

Placement Guidelines

Maps should be mounted low and at an angle to allow viewing while not disturbing the scenic view.

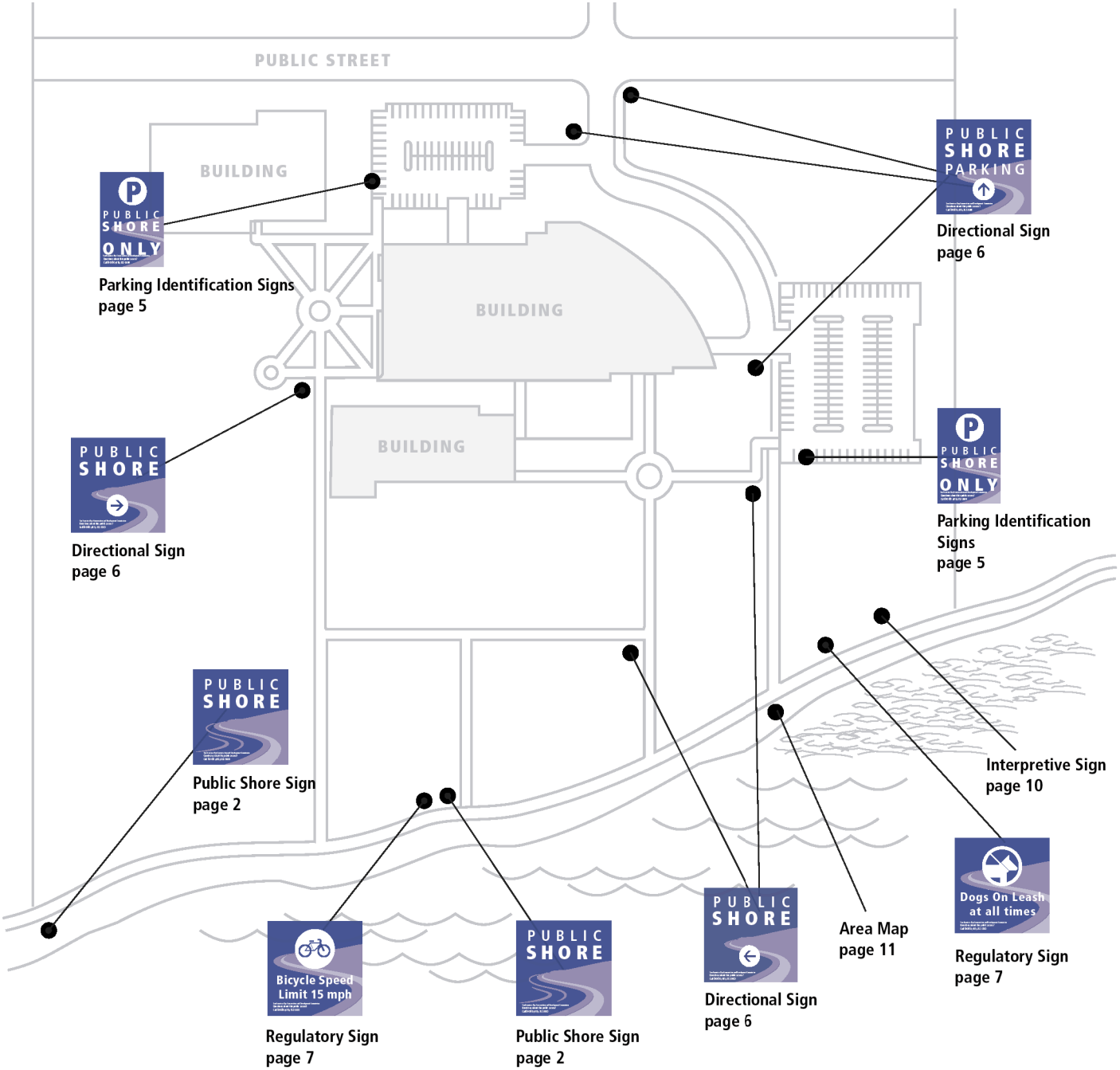

Sign Placement Guide

Sign Planning - Large Sites

This representative site plan shows how a selection of Public Shore signs can be arranged to create a continuous and appropriate set of messages for visitors.

Not all projects require the amount and types of signage shown. Project specific signage should be developed in consultation with BCDC staff and the Commission's Design Review Board.

Use as few signs as possible to communicate directions and regulations.

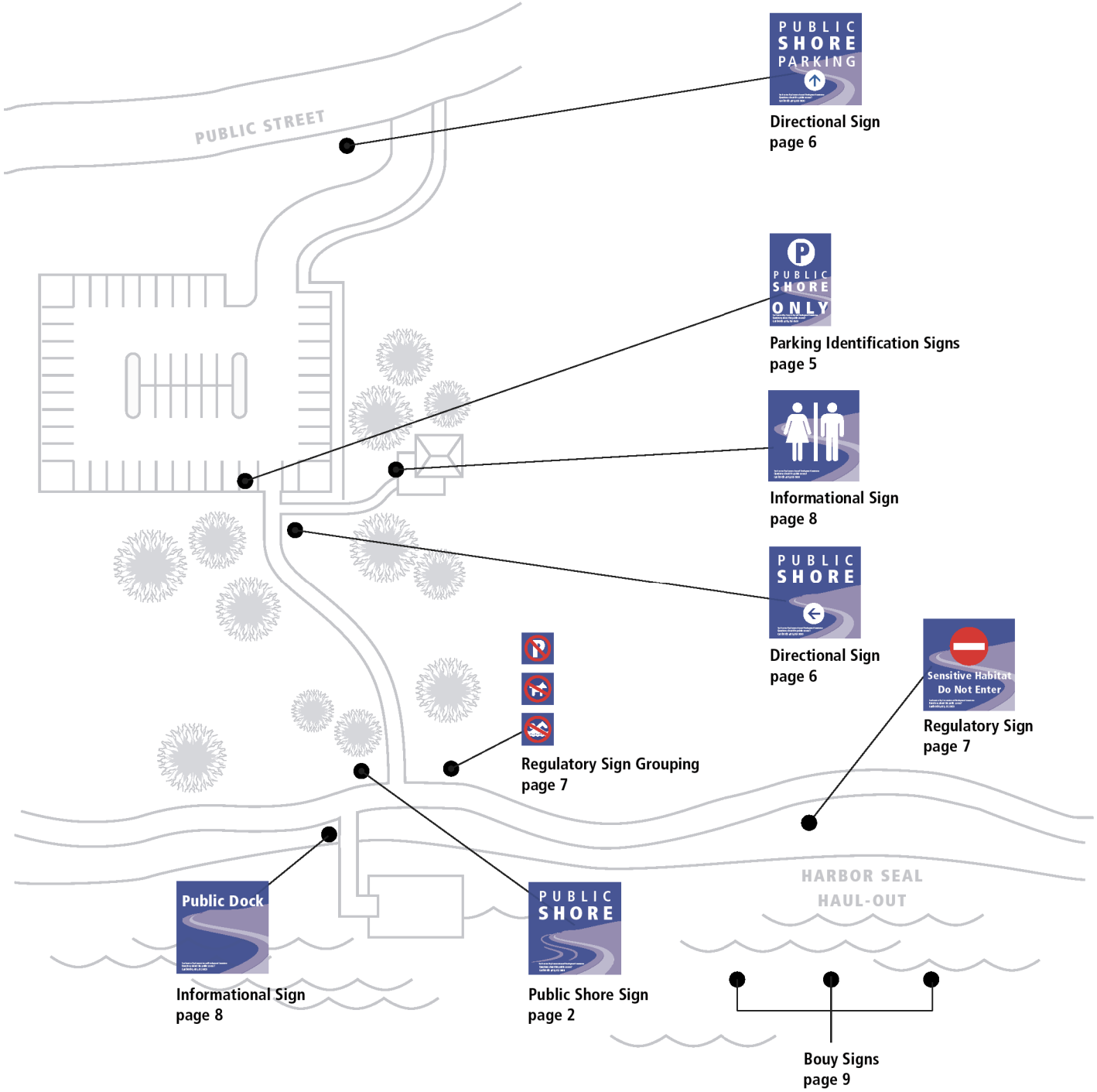

Sign Placement Guide

Sign Planning - Small Sites

This representative site plan shows how a selection of Public Shore signs can be arranged to create a continuous and appropriate set of messages for visitors.

Not all projects require the amount and types of signage shown. Project specific signage programs should be developed in consultation with BCDC staff and the Commission's Design Review Board.

Use as few signs as possible to communicate directions and regulations.

ABCDEFGHIJKLMNOPQRSTUVWXYZ
abcdefghijklmnopqrstuvwxyz
0123456789

Frutiger Black Condensed

ABCDEFGHIJKLMNOPQRSTUVWXYZ
abcdefghijklmnopqrstuvwxyz
0123456789

Frutiger Condensed

Arrows: Always use this arrow. Print circle in white; arrow in blue.

Symbols: Always print these symbols in white on the blue Public Shore Graphic Background.

Symbols: Always print the 'strike-out' circle and slash in red.

Graphics Standards - Fonts & Icons

Typography
All Public Shore signs are to be composed with the Frutiger type font family. The font was selected for its boldness and clarity.

Do not use any other type fonts on Public Shore signs.

Do not modify the proportions of Frutiger type font.

Symbols
Non-verbal pictograms or symbols help reinforce written messages and can be recognized and understood quickly. This group of symbols has been selected to work well together and to compliment the Frutiger type font.

Always print these symbols in white on the blue Public Shore Graphic Background.

Always print the 'strike-out' circle and slash in red.

Do not modify the symbols in any way. In consultation with staff, additional symbols may be used to address unique site conditions.

Pantone 287U | Pantone 7456U | Pantone 7450U | White | Pantone 1797C

Modified Graphic Background - use with regulatory and informational signs.

Applications on Graphic Background

Official Colors

The consistent use of color is important on Public Shore signs and interpretive elements. Color provides aesthetic interest and the continuity needed for a unified Public Shore identity.

Sign faces may be printed digitally from digital art files provided by BCDC. However, because digital printers can vary in color reproduction, the files should be adjusted to result in colors that match the Official Colors.

Do not use any other colors on Public Shore signs.

The Public Shore Graphic Background

A special Graphic Background has been developed for use with regulatory and informational signs.

The Public Shore Identification and Parking Identity

Utilize the background of the Public Shore sign on page 2.

BCDC Text for Signs

At the bottom of each identification, regulatory and informational sign, place the following text using the font specifications on page 14. San Francisco Bay Conservation and Development Commission. Questions about this public access? Call BCDC at (415)-352-3600.

Acceptable Materials

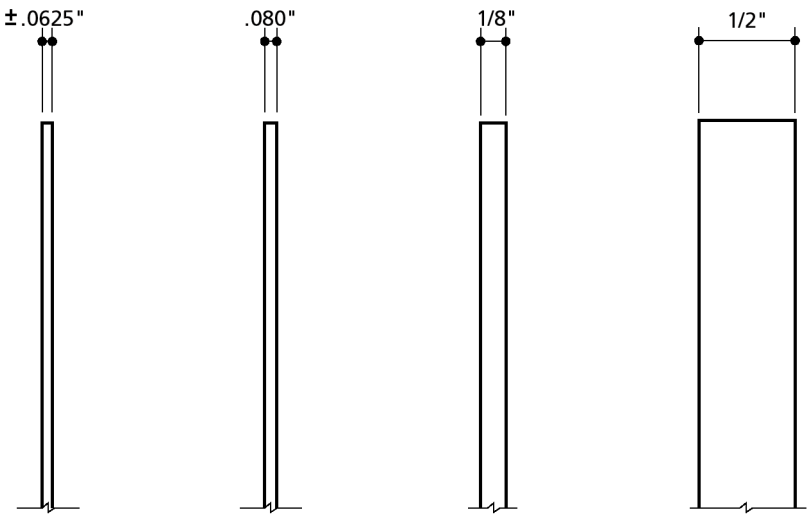

Porcelain Enamel | Aluminum | Acrylic | Phenolic Resin

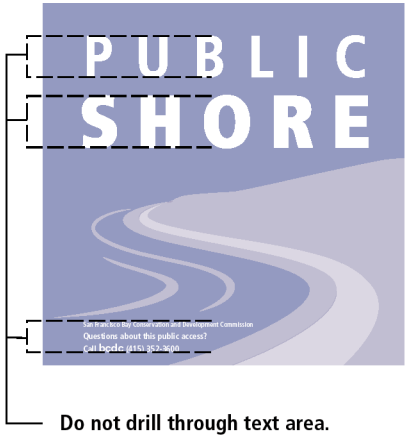

Do not drill through text area.

Acceptable Mounting Techniques

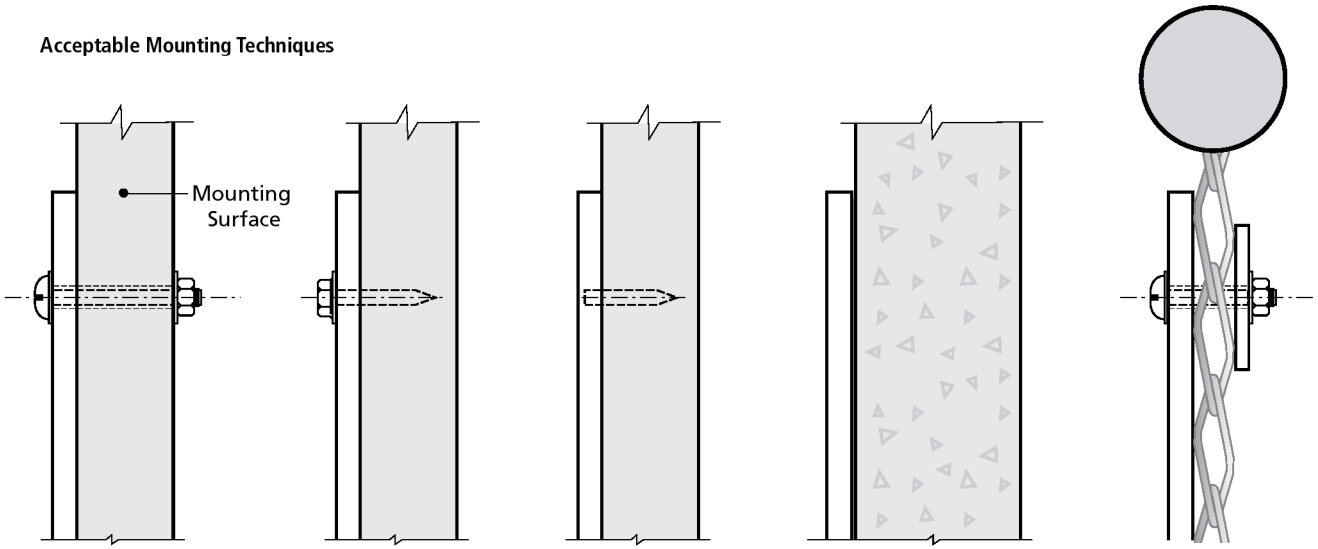

Bolt Through | Screw Into | Hidden Fasteners | On concrete with high-bond adhesive | On Fencing

There are many ways to fabricate and install effective signs. Shown here are acceptable materials and methods for implementation of all Public Shore signs.

Specific developments may have unique details for signs and, as long as the intent of these guidelines is met, project-specific details may be used.

Sign Fabrication & Mounting

Materials

Public Shore signs may be made of any one of a variety of rigid durable substrate materials, including, but not limited to: aluminum, acrylic, porcelain enamel or phenolic resin.

Graphics Application

Graphics may be applied to the panel in any number of recognized signage techniques including, but not limited to: silk screened, digital printing, porcelain enamel image or phenolic resin image.

Mounting

Signs should be firmly attached to the post, wall or with tamper-proof hardware. While it is preferred that Public Shore signs be mounted with concealed fasteners, bolting through the sign face is acceptable. The size of visible bolt heads should be minimal. Do not bolt through lettering or symbols.

Specifications

Materials for sign faces should be of the highest quality available. Inks and screen paints should be fade resistant for a minimum of five years. Fasteners should be tamper-proof. Corners of sign panels should be "eased" to eliminate sharp edges. Wooden posts should be No. 2 foundation-grade redwood, pressure treated douglas-fir larch or better. Steel posts should be hot-dipped galvanized to conform to ASTM A 123; minimum size to be 3" diameter.