Exhibit 48

Westpoint Marina

Redwood City, Ca.

Vicinity Map

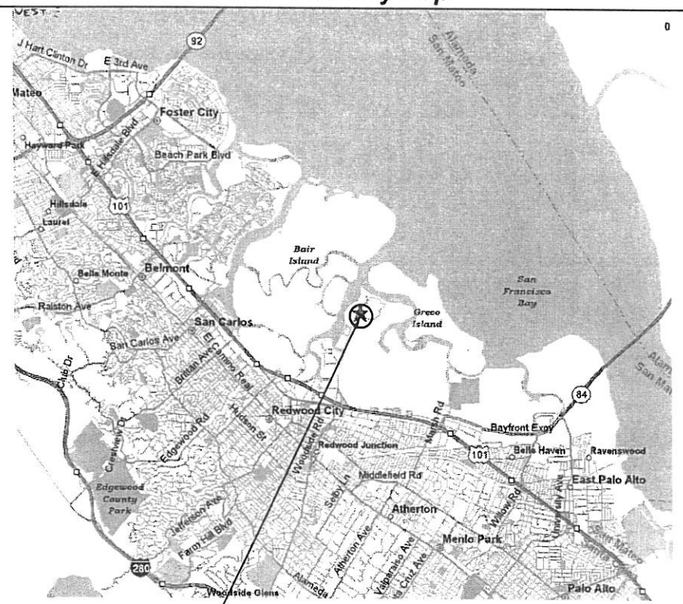

PROJECT LOCATION

Site Plan

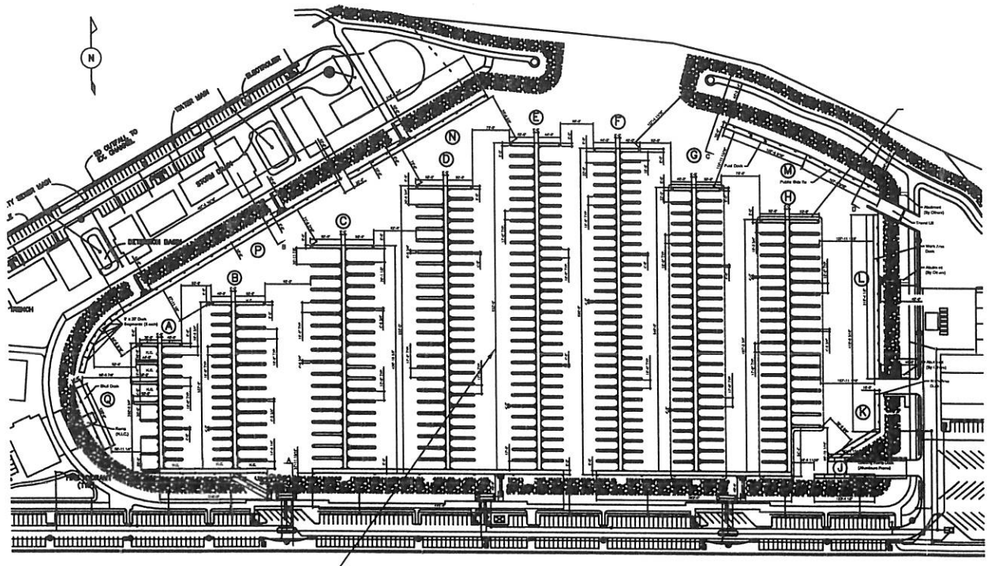

AREA OF WORK

ADA ACCESSIBLE SLIPS

TOTAL BOAT SLIPS IN FACILITY	MINIMUM NUMBER OF REQUIRED ACCESSIBLE BOAT SLIPS
1 to 25	1
26 to 50	2
51 to 100	3
101 to 150	4
151 to 300	5
301 to 400	6 — All Slips ADA Compliant
401 to 500	7
501 to 600	8
601 to 700	9
701 to 800	10
801 to 900	11
901 to 1000	12
1001 and over	12 plus 1 for each 100 or fraction thereof over 1000

* In Accordance With The Americans With Disabilities Accessibility Guidelines (ADAAG) 15.2 Which Addresses Recreational Boating Facilities.

WARNING:
BELLINGHAM MARINE INDUSTRIES HAS BEEN NOTIFIED BY ITS WOOD PRESERVERS, THAT THE CHEMICALS USED IN THE WOOD TREATMENT PROCESS ARE KNOWN TO CAUSE CANCER.

CAUTION:
FLOAT SYSTEMS ARE UNSTABLE WHEN PLACED IN WATER PRIOR TO ASSEMBLY IN THEIR FINAL INTENDED CONFIGURATION. MODULES OR SUBASSEMBLIES SHOULD BE HANDLED WITH CARE DURING INSTALLATION AND SHOULD NEVER BE STOOD OR WALKED UPON PRIOR TO FINISHED ASSEMBLY.

TABLE OF CONTENTS

DRAWING	SHT(S)	Revision Number
Cover Sheet & General Notes	CS1 - CS2	
Overall Layout	OL1	
Pile Layout	PL1	
Gangway Construction & Rail Fab Details	GD1	
Electrical Layout	EL1- EL20	
Domestic Water/ Sewer Layout	DL1- DL5	
Fire System Layout	FL1- FL5	
Typical Assembly Details	A1- A4	
Gangway Elevation	GE1	
Pile Design/ Elevation	PD1	
Typ. End Gate Details	EG1	
Sewage Pump Out System	SS1	

Project Address:
1400 Seaport Blvd.
Redwood City, Ca. 94063

Design/ Build Contractor:
Bellingham Marine Industries, Inc.
1205 Business Park Drive
Dixon, CA 95620
ph. 707.678.2385
fax 707.678.1760

Electrical Designer:
Marina Power & Lighting, Inc.
149 Warwick Ct.
Williamsburg, VA 23185
ph. 757.258.8800

Structural Engineer:
Redpoint Structures, P.S.
1601 'F' Street
Bellingham, WA 98225
ph. 360.715.0121 fax 360.752.1502

Bellingham MARINE
innovative harbor and waterfront solutions
Southwest Division
1205 Business Park Drive
Dixon, CA 95620
TEL: (707) 678-2385
FAX: (707) 678-1760

This drawing contains proprietary information which is the property of Bellingham Marine Industries, Inc., and shall not be copied, reproduced or made available to third parties without prior written permission from Bellingham Marine Industries, Inc. UNIFLOAT®, UNIDECK® and UNISTACK® are registered trademarks of Bellingham Marine Industries, Inc. © Bellingham Marine Industries, Inc.

UNIFLOAT®
precision engineered flotation systems

REVISIONS

MARK	DATE	DESCRIPTION	BY

REVIEWED BY: _____ DATE
_____ DATE

City of Redwood

Site Improvement Plan

ACCEPTED BY: _____ R.C.E. EXP. DATE
ACCEPTED BY: CITY ENGINEER R.C.E. EXP. DATE

DRAWN BY: D.HILDEBRANDT
CHECKED BY: --
DATE: 7-13-06
SHEET No. 1 OF 43
DRAWING NUMBER: CS1

ABBREVIATIONS

&	and	LIN	Linear/lineal
@	at	LG	Long
A.C.O.E.	Army Corps of Engineers	L.L.	Live Load
ALUM	Aluminum	LW	Lock Washer
X	by	M.L.L.W.	Mean Lower Low Water
BEL	Below	MAX	Maximum
BD	Board	MB	Machine Bolt
BM	Beam	MDPE	Medium Density Polyethylene
CB	Carriage Bolt	MFR	Manufacturer
℄	Center Line	MM	Millimeter
C-C	Center to Center	MIN	Minimum
CF	Cubic Foot/Feet	N.I.C.	Not In Contract
C.I.P.	Cast in Place	NO.	Number
CLR	Clear	# (before number)	Number
CONC	Concrete	(N)	New
CONT	Continuous	O.A.	Overall
CW	Cut Washer	O.C.	On Center
C.Y.	Cubic Yard	O/O	Out-to-Out
°	Degrees	OPP.	Opposite
Ø	Diameter	%	Percent
DP	Deep	±	Plus or Minus
DWG	Drawing	PL	Plate
DET.	Detail	PCF	Pounds per Cubic Foot
DIA.	Diameter	P.O.C.	Point of Connection
D.L.	Dead Load	PSI	Pounds per Square Inch
ELECT	Electrical	PVC	Polyvinyl Chloride
ELEV. or EL.	Elevation	PW	Plate Washer
EXIST. or (E)	Existing	REINF.	Reinforced, reinforcement
EA	Each	REQ'D	Required
EXP	Expansion	RSP	Rock Slope Protection
FB	Flat Bar	SQ.	Square
FH	Flat Head	SF	Square Foot
FIN	Finish	SIM	Similar
FT	Foot	SHT	Sheet
FW	Flat Washer	S.S.	Stainless Steel
GA.	Gage	T.O.C.	Top of Concrete
GALV	Galvanized	T.O.S.	Top of Slope
GLB	Glue Laminated Beam	TYP.	Typical
H.D.G.	Hot Dip Galvanized	THK	Thick
HDPE	High Density Polyethylene	UHMW	Ultra High Molecular Weight
HDWR	Hardware	VERT	Vertical
HN	Hex Nut	W.W.M.	Welded Wire Mesh
IN.	Inch(es)	w/	with
LBS	pound(s)	W.	Wide
# (after number)	pounds	XHW	Extreme High Water
LAM	Laminated	XLW	Extreme Low Water

GENERAL NOTES:

1. DOCK AND GANGWAY/RAMP MANUFACTURERS SHALL PROVIDE ALL NECESSARY CALCULATIONS, SCALED DRAWINGS AND ALL OTHER SUPPORTING DOCUMENTATION REQUIRED BY THE GOVERNING JURISDICTIONS FOR PERMIT. ALL DRAWINGS AND CALCULATIONS SHALL BE SIGNED AND STAMPED BY A LICENSED CALIFORNIA PROFESSIONAL ENGINEER. DRAWINGS SHALL SHOW ALL DETAILS AND OVERALL CONFIGURATIONS NECESSARY TO CLEARLY DESCRIBE THE WORK AND MATERIALS OF CONSTRUCTION.

2. GENERAL CONTRACTOR SHALL COORDINATE ALL WORK OF ALL SUBCONTRACTORS AND OTHER SUBCONTRACTORS CONTRACTED DIRECTLY WITH THE OWNER, AS APPLICABLE, FOR SCHEDULE AND WORK COORDINATION REQUIREMENTS. THE OWNER SHALL BEAR NO RESPONSIBILITY FOR FAILURE ON THE PART OF THE CONTRACTOR TO COORDINATE ACTIVITIES OF CONTRACTOR'S EMPLOYEES OR SUBCONTRACTORS.

4. THE CONTRACTOR SHALL VERIFY ALL DIMENSIONS AND SITE CONDITIONS BEFORE STARTING WORK. THE OWNER OR ENGINEER SHALL BE NOTIFIED OF DISCREPANCIES PRIOR TO THE START OF THE WORK. THE OWNER SHALL BEAR NO RESPONSIBILITY FOR EXPENSES INCURRED AS A RESULT OF FAILURE ON THE PART OF THE CONTRACTOR TO VERIFY DIMENSIONS AND/OR VERIFIABLE SITE CONDITIONS PRIOR TO BEGINNING WORK.

5. DIMENSIONS TAKE PRECEDENCE OVER SCALE.

6. CONTRACTOR SHALL MAINTAIN FIRE LANES AND ACCESS TO EXISTING FACILITIES AND EQUIPMENT.

7. ALL WORK AND MATERIALS SHALL CONFORM TO THE CURRENT EDITIONS OF THE CALIFORNIA BUILDING CODE, UNIFORM FIRE CODE, UNIFORM MECHANICAL CODE, NATIONAL ELECTRICAL CODE, UNIFORM PLUMBING CODE AND AMERICANS WITH DISABILITIES ACT (ADA), ALUMINUM ASSOCIATION'S "SPECIFICATIONS FOR ALUMINUM STRUCTURES."

8. CONTRACTOR SHALL STRICTLY ENFORCE ALL APPLICABLE SAFETY LAWS (I.E. OSHA, CAL-OSHA) AND MAINTAIN SITE SAFETY.

9. IT SHALL BE THE RESPONSIBILITY OF THE CONTRACTOR TO PROVIDE SUPERVISION OF THE CONSTRUCTION WORK TO ENSURE THAT IT IS BUILT IN CONFORMANCE WITH THE APPROVED PLANS AND SPECIFICATIONS.

10. THE CONTRACTOR SHALL MAKE AND KEEP CURRENT A SET OF RECORD DRAWINGS SHOWING EXACT DIMENSIONED LOCATIONS OF CONSTRUCTION CHANGES. TWO SETS SHALL BE SUBMITTED TO THE OWNER WITHIN 30 DAYS OF PROJECT COMPLETION FOR ALL WORK AND SHALL INCLUDE ALL MAINTENANCE AND OPERATIONS MANUALS AND CERTIFICATIONS OF PERFORMANCE TO THESE PLANS AND SPECIFICATIONS.

12. "REMOVE" SHALL MEAN TO DEMOLISH TRANSPORT AND DISPOSE OF AT CONTRACTOR'S EXPENSE.

13. "REMOVE AND REINSTALL" SHALL MEAN TO REMOVE, PROTECT, STORE, CLEAN AND REINSTALL IN GOOD CONDITION.

14. "SALVAGE" SHALL MEAN TO DISASSEMBLE, SORT INTO LIKE COMPONENTS, PACKAGE OR PALLETIZE INTO TRANSPORTABLE UNITS AND TRANSPORT TO A SITE DESIGNATED BY THE OWNER.

15. ALL UNISTRUT ATTACHED TO GANGWAYS FOR SUPPORT OF UTILITIES SHALL BE OF ALUMINUM WITH STAINLESS STEEL CONNECTORS AND BOLTS.

16. SPECIAL INSPECTIONS: CONTINUOUS INSPECTION SHALL BE MADE BY A REGISTERED DEPUTY INSPECTOR (PER CBC SECTION 1701). THE DESIGN/ BUILD CONTRACTOR SHALL PROVIDE WRITTEN REPORTS TO THE OWNER FOR THE FOLLOWING:
   A. PILE DRIVING (SEE ALSO NOTE 19 BELOW)

17. CONCRETE ANCHORS SHALL BE INSTALLED IN STRICT CONFORMANCE WITH MANUFACTURER'S RECOMMENDATIONS, IN SOUND MATERIAL, WITH NO LESS THAN THE MINIMUM EMBEDMENT SPECIFIED BY THE MANUFACTURER. HILTI KWIK-BOLT-ICBO REPORT NO. ER-4627.

18. ALL PILE DRIVING AND INSTALLATION SHALL BE PERFORMED UNDER PERIODIC INSPECTION OF GEOTECHNICAL ENGINEER AND APPROVAL OF THE OWNER. A LOG OF PILE DRIVING SHALL BE KEPT.

19. WELDING:
   A. WELD LENGTHS SHOWN ARE EFFECTIVE LENGTH PER CODE. WHERE LENGTHS ARE NOT SHOWN, THE WELD SHALL BE FULL LENGTH OF JOINT. ALL CONNECTED PARTS SHALL BE SEAL-WELDED, ALL-AROUND, A MINIMUM OF 1/8" FILLET WELDS.
   B. ALL WELDING SHALL BE AS PER LATEST EDITION OF AWS D1.1.
   C. ALL WELDERS SHALL BE CERTIFIED TO THE SATISFACTION OF THE GOVERNING JURISDICTION(S).
   D. WELD DAMS ARE NOT PERMITTED IN LIEU OF WELD TABS.
   E. ALL WELDING REQUIREMENTS SHOWN OR INDICATED ON THE DRAWINGS MAY BE FIELD OR SHOP WELDED AS REQUIRED FOR EFFICIENT ERECTION, SUBJECT TO THE APPROVAL OF THE ENGINEER.

20. STEEL:
   A. STRUCTURAL STEEL SHALL CONFORM TO STANDARD SPECIFICATIONS FOR STRUCTURAL STEEL FOR BRIDGES AND BUILDINGS, ASTM A-36, UNLESS NOTED OTHERWISE.
   B. WELDED AND SEAMLESS STEEL PIPE SHALL CONFORM TO ASTM A53/GRADE B.
   C. COLD-FORMED WELDED AND SEAMLESS CARBON STEEL STRUCTURAL TUBING SHALL CONFORM TO ASTM A500, UNLESS NOTED OTHERWISE.
   D. HOT-FORMED WELDED AND SEAMLESS CARBON STEEL STRUCTURAL TUBING SHALL CONFORM TO ASTM A501, UNLESS NOTED OTHERWISE.
   E. FABRICATION AND ERECTION SHALL COMPLY WITH THE LATEST AISC SPECIFICATIONS.
   F. ALL DIMENSIONS SHALL BE FIELD VERIFIED PRIOR TO FABRICATION OR ERECTION OF STRUCTURAL STEEL OR METAL FABRICATIONS.
   G. ALL STRUCTURAL AND MISCELLANEOUS STEEL SHALL HAVE HOT-DIPPED GALVANIZED FINISH, UNLESS NOTED OTHERWISE.
   H. ALL FASTENERS SHALL BE STAINLESS STEEL. ALL THRU RODS SHALL BE HOT DIPPED GALVANIZED.

21. ALUMINUM
   A. ALUMINUM SHAPES SHALL BE EXTRUDED FROM 6061-T6 OR 6063-T6 UNLESS OTHERWISE NOTED.

SPECIAL CONDITION:

1. CONSTRUCTION RESPONSIBILITIES AND DEBRIS REMOVAL

   (a) NO CONSTRUCTION MATERIALS, EQUIPMENT, DEBRIS OR WASTE SHALL BE PLACED OR STORED WHERE IT MAY BE SUBJECT TO INUNDATION OR DISPERSION IN THE WATERS OF THE MARINA.

   (b) ANY AND ALL DEBRIS RESULTING FROM CONSTRUCTION ACTIVITIES SHALL BE REMOVED FROM THE SITE WITHIN 10 DAYS OF COMPLETION OF CONSTRUCTION.

   (c) NO MACHINERY OR CONSTRUCTION MATERIALS NOT ESSENTIAL FOR PROJECT; IMPROVEMENTS SHALL BE ALLOWED AT ANY TIME IN THE INTERTIDAL ZONE;

   (d) IF TURBID CONDITIONS ARE GENERATED DURING CONSTRUCTION, A SILT CURTAIN SHALL BE UTILIZED TO CONTROL TURBIDITY.

   (e) FLOATING BOOMS SHALL BE USED TO CONTAIN DEBRIS DISCHARGED INTO COASTAL WATERS AND ANY DEBRIS DISCHARGED SHALL BE REMOVED AS SOON AS POSSIBLE BUT NO LATER THAN THE END OF EACH DAY.

   (f) NON-BUOYANT DEBRIS DISCHARGED INTO COASTAL WATERS SHALL BE RECOVERED BY DIVERS AS SOON AS POSSIBLE AFTER LOSS.

   (g) REASONABLE AND PRUDENT MEASURES SHALL BE TAKEN TO PREVENT ALL DISCHARGE OF FUEL OR OILY WASTE FROM HEAVY MACHINERY, PILE DRIVERS OR CONSTRUCTION EQUIPMENT OR POWER TOOLS INTO THE WATERS. THE APPLICANT AND THE APPLICANT'S CONTRACTORS SHALL HAVE ADEQUATE EQUIPMENT AVAILABLE TO CONTAIN ANY SUCH SPILL IMMEDIATELY.

Vicinity Map

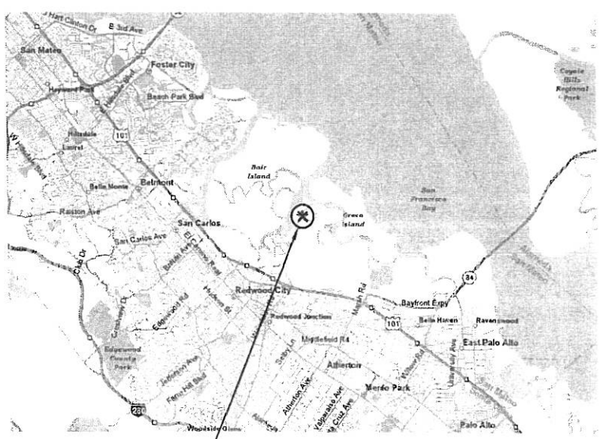

Site Plan

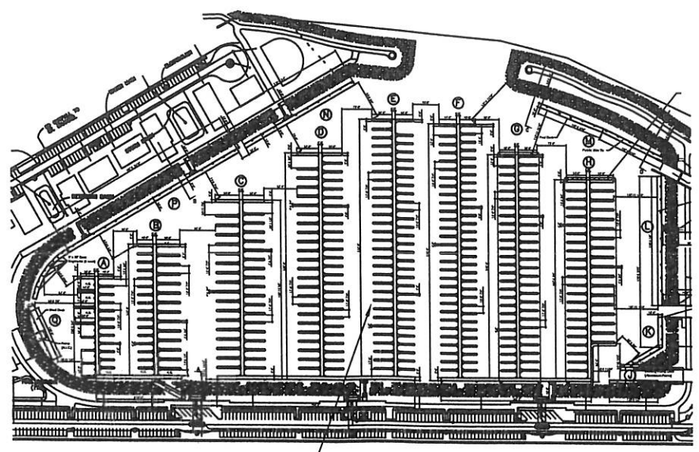

Project Address:

1400 Seaport Blvd.
Redwood City, CA 94063

Bellingham MARINE
Innovative harbor and waterfront solutions
Southwest Division
1205 Business Park Drive
Dixon, CA 95620
TEL: (707) 678-2385
FAX: (707) 678-1760

This drawing contains proprietary information which is the property of Bellingham Marine Industries, Inc., and shall not be copied, reproduced or made available to third parties without prior written permission from Bellingham Marine Industries, Inc. UNIFLOAT®, UNIDECK® and UNISTACK® are registered trademarks of Bellingham Marine Industries, Inc. © Bellingham Marine Industries, Inc.

UNIFLOAT®
precision engineered flotation systems

REVISIONS

MARK	DATE	DESCRIPTION	BY

City of Redwood

General Notes

ACCEPTED BY: _____ R.C.E. EXP. DATE

ACCEPTED BY: CITY ENGINEER R.C.E. EXP. DATE

REVIEWED BY: _____ DATE

DRAWN BY: D.J.HILDEBRANDT

CHECKED BY: –

DATE: 7-13-06

SHEET No. 2 OF 43

DRAWING NUMBER CS2

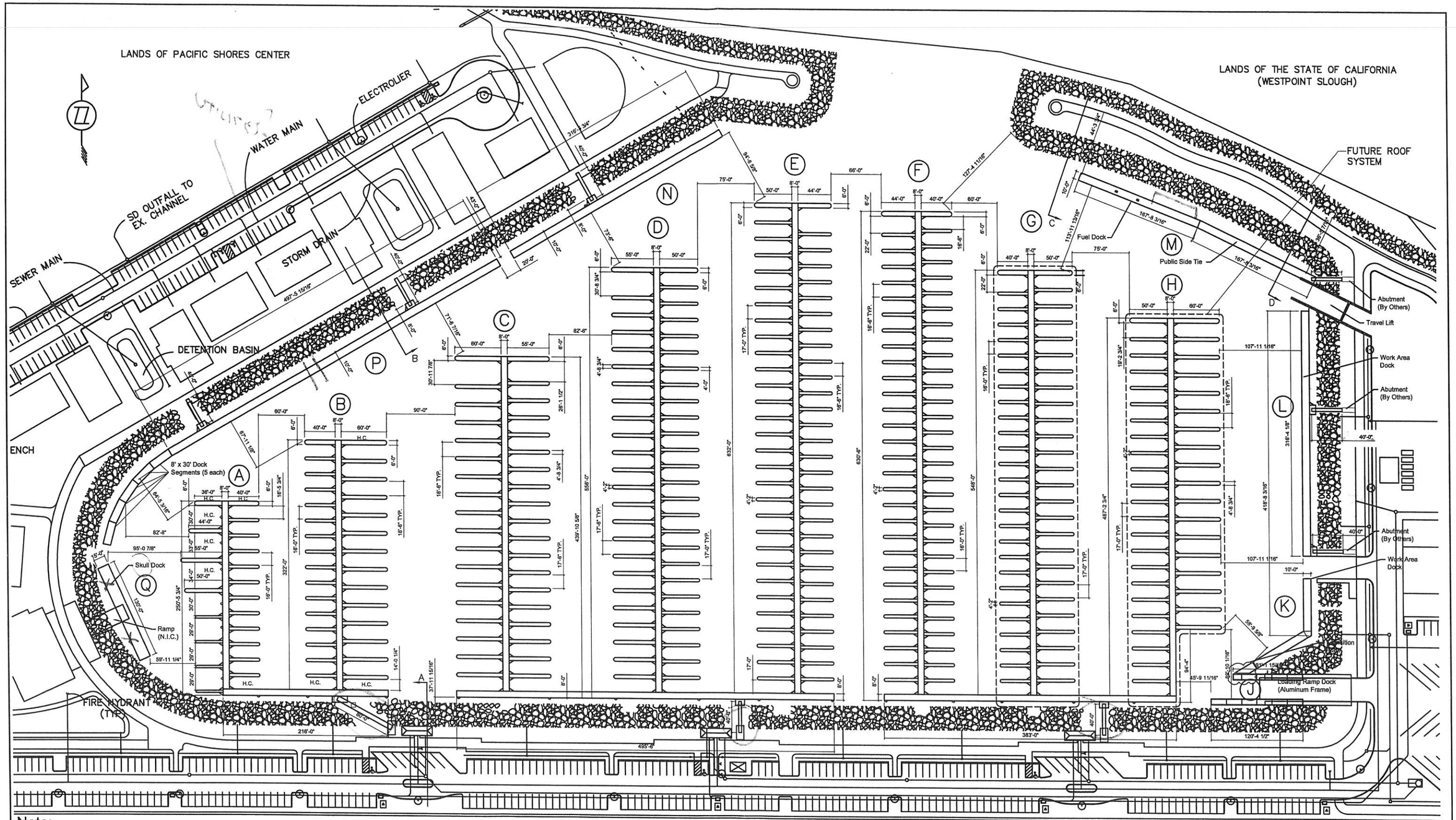

Note:
Over Excavation Of Slope May Be Required @ Gangway Landing Area. To Be Confirmed With Engineering.

0' 20' 100'
10' SCALE AS SHOWN

LANDS OF CARGILL INCORPORATED

NO.	DATE	DESCRIPTION	BY

REVISIONS

Project Number: 06-3-442

PROJECT MANAGER _

Westpoint Marina
Redwood City, Ca.

Overall Layout

Bellingham MARINE
Innovative harbor and waterfront solutions

UNIFLOAT.

This drawing contains proprietary information which is the property of Bellingham Marine Industries, Inc., and shall not be copied, reproduced or made available to third parties without prior written permission from Bellingham Marine Industries, Inc. UNIFLOAT®, UNIDECK® and UNISTACK® are registered trademarks of Bellingham Marine Industries, Inc. © Bellingham Marine Industries, Inc.

SCALE: As Noted
DRAWN BY: D. Hildebrandt
CHECKED BY: –
ENGINEER/DESIGNER: – (-)
SHEET: 3 of 43
Drawing Number: OL1

City Of Redwood

ACCEPTED BY: _____ R.C.E. EXP. DATE
ACCEPTED BY: _____ CITY ENGINEER R.C.E. EXP. DATE

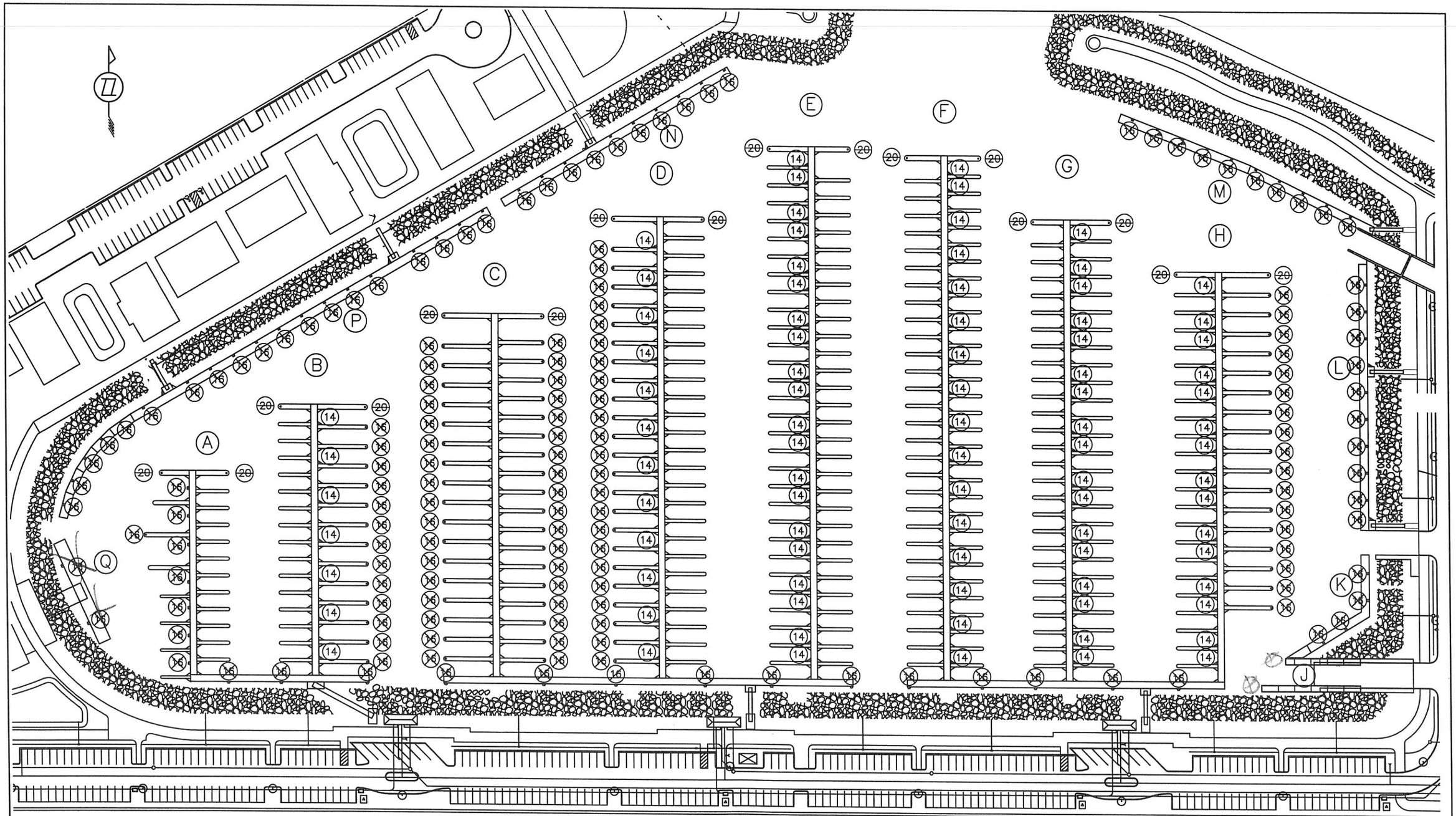

(14) = 14"Ø Prestressed Concrete Piles w/ 7- 1/2"Ø LRS f'c = 6 ksi 87 each

(16) = 16"Ø Prestressed Concrete Piles w/ 9- 1/2"Ø LRS f'c = 6 ksi 163 each

(20) = 20"Ø Prestressed Concrete Piles w/ 14- 1/2"Ø LRS f'c = 6 ksi 16 each

NO.	DATE	DESCRIPTION	BY
1			
2			
3			
4			
5	-	-	-

REVISIONS

Project Number: **06-3-442**

PROJECT MANAGER _

Westpoint Marina

Redwood City, Ca.

Pile Layout

Bellingham MARINE — Innovative harbor and waterfront solutions

UNIFLOAT — precision engineered fabrication systems

This drawing contains proprietary information which is the property of Bellingham Marine Industries, Inc., and shall not be copied, reproduced or made available to third parties without prior written permission from Bellingham Marine Industries, Inc. UNIFLOATR, UNIDECK® and UNISTACK® are registered trademarks of Bellingham Marine Industries, Inc. © Bellingham Marine Industries, Inc.

SCALE:	As Noted
DRAWN BY:	D. Hildebrandt
CHECKED BY:	_
ENGINEER/DESIGNER:	_ (-)
SHEET:	4 of 43
Drawing Number	PL1

City Of Redwood

ACCEPTED BY: _____ R.C.E. EXP. DATE

ACCEPTED BY: CITY ENGINEER R.C.E. EXP. DATE

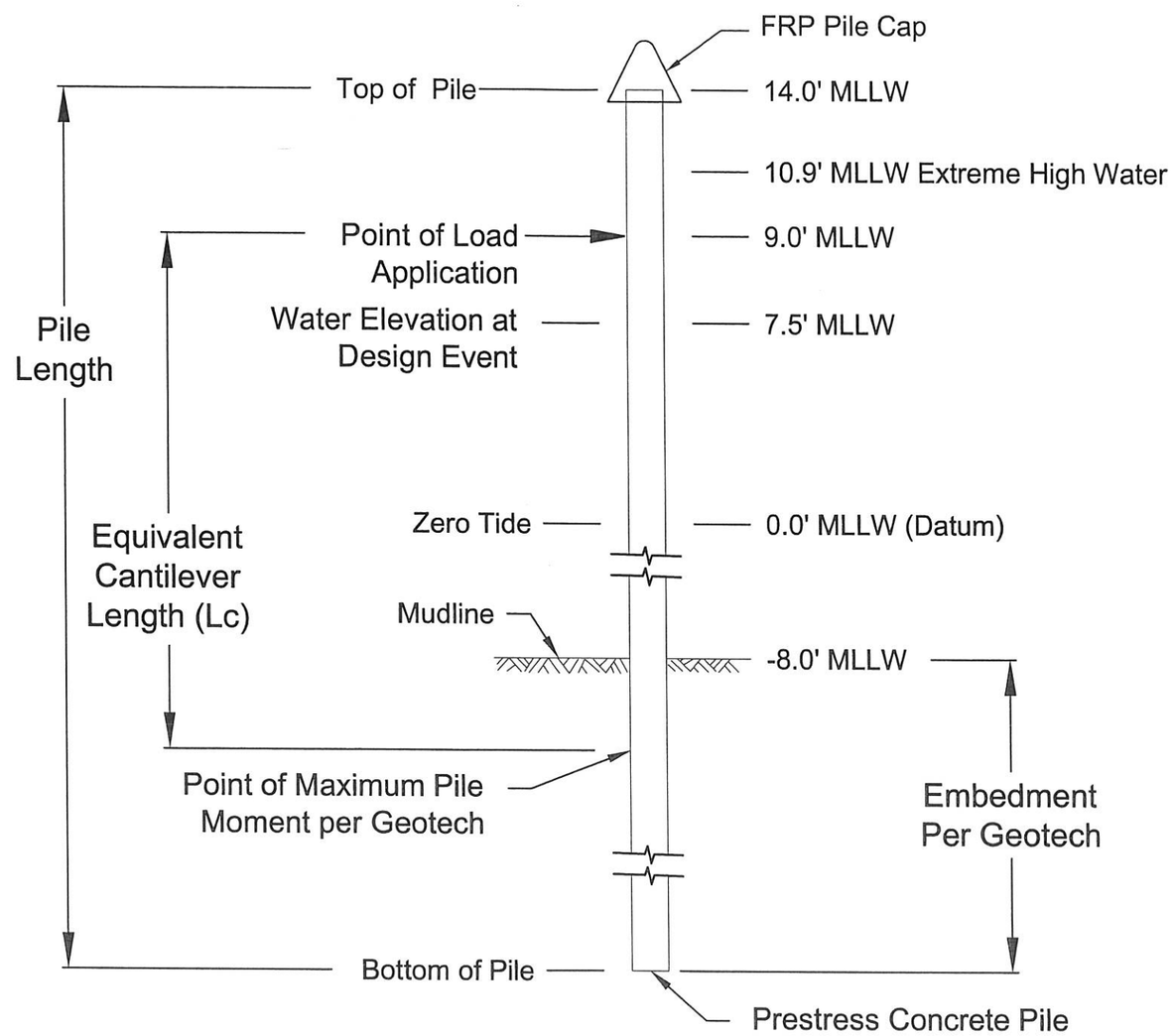

14"Ø Pa = 2.8k - 24' Embed
16"Ø Pa = 4.3k - 24' Embed
20"Ø Pa = 8.0k - 29' Embed

NO.	DATE	DESCRIPTION	BY

REVISIONS

Project Number: *06-3-442*

PROJECT MANAGER _

Westpoint Marina
Redwood City, Ca.

Pile Design Elevation

Bellingham MARINE
Innovative harbor and waterfront solutions
UNIFLOAT. pontoon engineered floatation systems

This drawing contains proprietary information which is the property of Bellingham Marine Industries, Inc., and shall not be copied, reproduced or made available to third parties without prior written permission from Bellingham Marine Industries, Inc. UNIFLOAT®, UNIDECK® and UNISTACK® are registered trademarks of Bellingham Marine Industries, Inc. © Bellingham Marine Industries, Inc.

SCALE: As Noted
DRAWN BY: D. Hildebrandt
CHECKED BY: –
ENGINEER/DESIGNER: – (–)
SHEET: 5 of 43
Drawing Number: PD1

City Of Redwood

ACCEPTED BY: _____ R.C.E. EXP. DATE
ACCEPTED BY: _____ CITY ENGINEER R.C.E. EXP. DATE

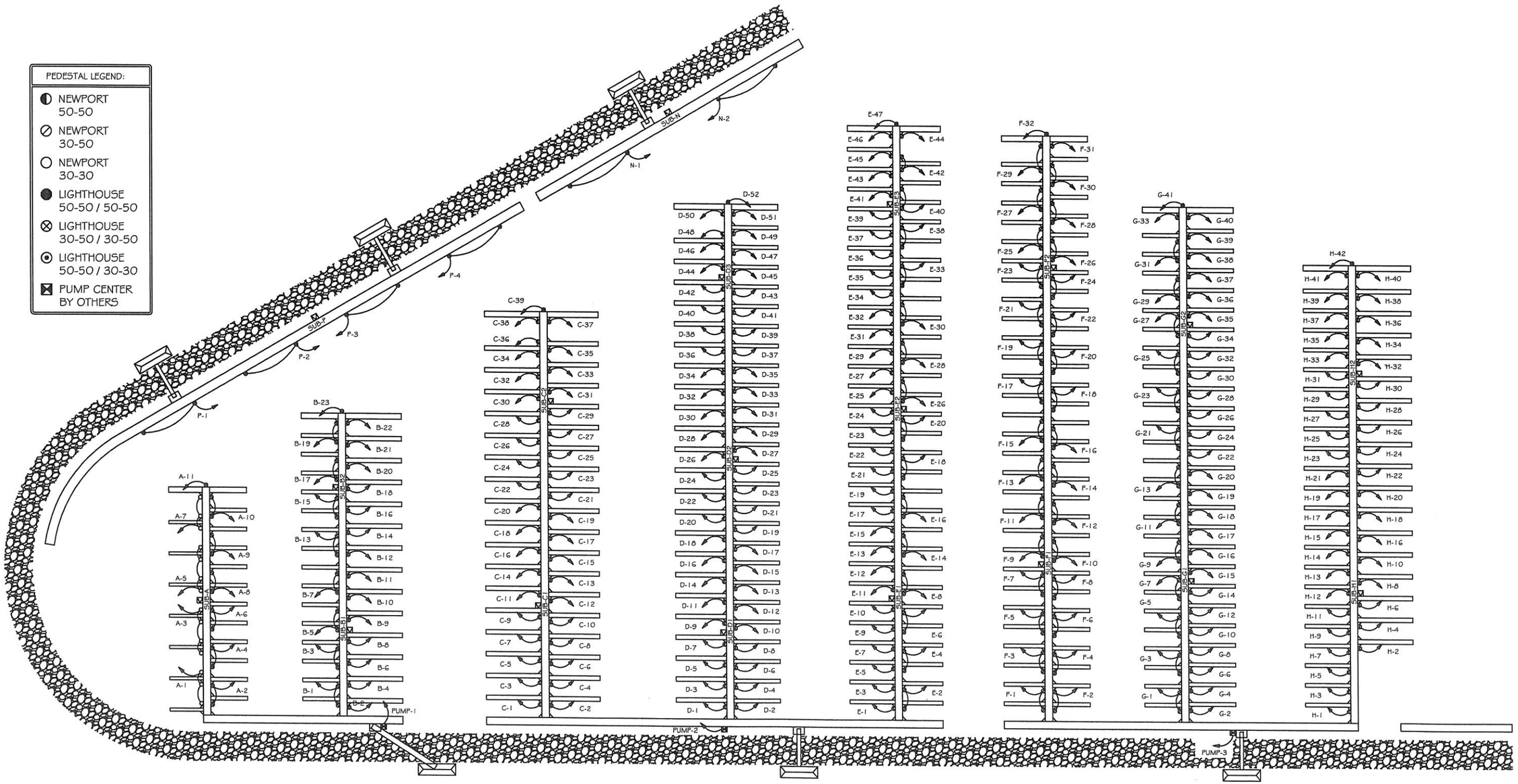

NO.	DATE	DESCRIPTION	BY
-	-		-

REVISIONS

Project Number: 06-3-442

PROJECT MANAGER _

Westpoint Marina
Redwood City, Ca.

Electrical Layout

Bellingham MARINE
Innovative harbor and waterfront solutions

UNIFLOAT. precision engineered floatation systems

This drawing contains proprietary information which is the property of Bellingham Marine Industries, Inc., and shall not be copied, reproduced or made available to third parties without prior written permission from Bellingham Marine Industries, Inc. UNIFLOAT®, UNIDECK® and UNISTACK® are registered trademarks of Bellingham Marine Industries, Inc. © Bellingham Marine Industries, Inc.

SCALE: As Noted
DRAWN BY: D. Hildebrandt
CHECKED BY: _
ENGINEER/DESIGNER: — (-)
SHEET: 8 of 43
Drawing Number: EL1

City Of Redwood

ACCEPTED BY: _____ R.C.E. EXP. DATE
ACCEPTED BY: _____ CITY ENGINEER R.C.E. EXP. DATE

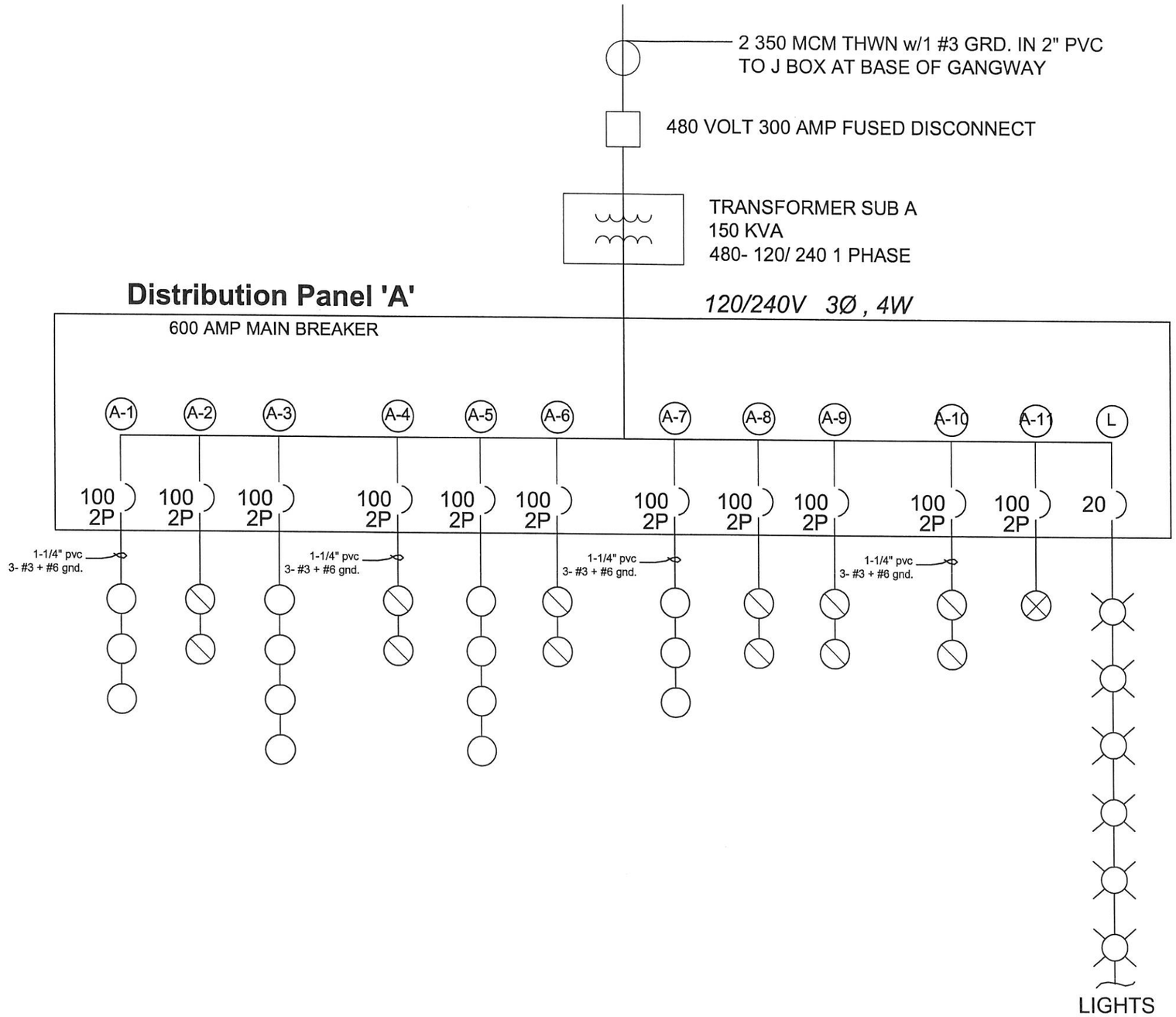

NO.	DATE	DESCRIPTION	BY
-	-	-	-

REVISIONS

Project Number: 06-3-442

PROJECT MANAGER _

Westpoint Marina
Redwood City, Ca.

Single Line Diagram Dock A

Bellingham MARINE
Innovative harbor and waterfront solutions
UNIFLOAT. precision engineered floatation systems

This drawing contains proprietary information which is the property of Bellingham Marine Industries, Inc., and shall not be copied, reproduced or made available to third parties without prior written permission from Bellingham Marine Industries, Inc. UNIFLOAT®, UNIDECK® and UNISTACK® are registered trademarks of Bellingham Marine Industries, Inc. © Bellingham Marine Industries, Inc.

SCALE: As Noted
DRAWN BY: D. Hildebrandt
CHECKED BY: _
ENGINEER/DESIGNER: _ (-)
SHEET: 7 of 43
Drawing Number: EL2

City Of Redwood

ACCEPTED BY: _____ R.C.E. EXP. DATE
ACCEPTED BY: _____ CITY ENGINEER R.C.E. EXP. DATE

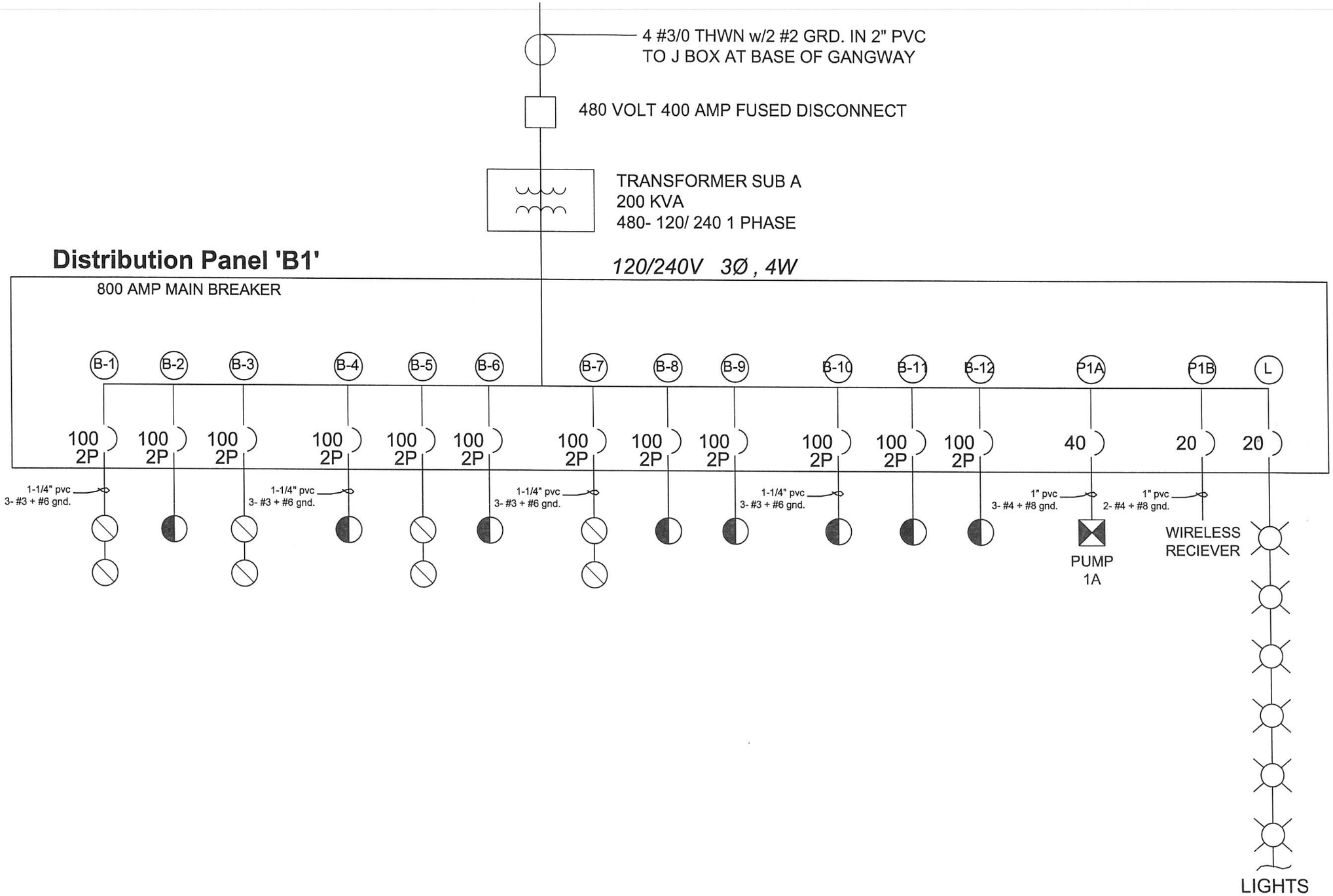

NO.	DATE	DESCRIPTION	BY
-	-		-

REVISIONS

Project Number:
06-3-442

PROJECT MANAGER _

Westpoint Marina
Redwood City, Ca.

Single Line Diagram Dock B

Bellingham MARINE
Innovative harbor and waterfront solutions
UNIFLOAT

This drawing contains proprietary information which is the property of Bellingham Marine Industries, Inc., and shall not be copied, reproduced or made available to third parties without prior written permission from Bellingham Marine Industries, Inc. UNIFLOAT®, UNIDECK® and UNISTACK® are registered trademarks of Bellingham Marine Industries, Inc. © Bellingham Marine Industries, Inc.

SCALE:	As Noted
DRAWN BY:	D. Hildebrandt
CHECKED BY:	_
ENGINEER/DESIGNER:	– (–)
SHEET:	8 of 43
Drawing Number:	EL3

City Of Redwood

ACCEPTED BY: _____ R.C.E. EXP. DATE

ACCEPTED BY: _____ CITY ENGINEER R.C.E. EXP. DATE

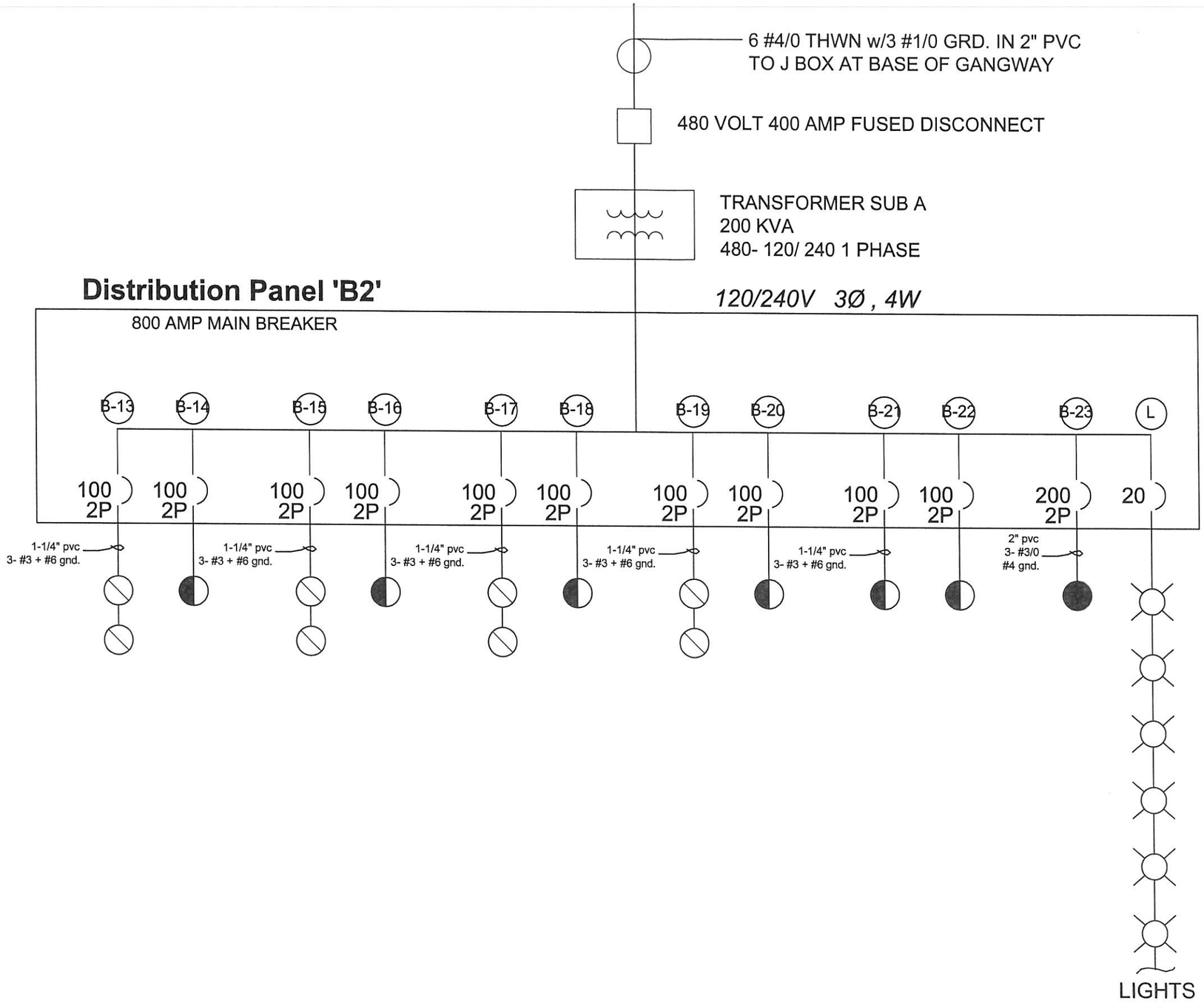

NO.	DATE	DESCRIPTION	BY
△			
△			
△			
△			
△	-	-	-

REVISIONS

Project Number:

06-3-442

PROJECT MANAGER _

Westpoint Marina

Redwood City, Ca.

Single Line Diagram Dock B

Bellingham MARINE. UNIFLOAT.

Innovative harbor and waterfront solutions

This drawing contains proprietary information which is the property of Bellingham Marine Industries, Inc., and shall not be copied, reproduced or made available to third parties without prior written permission from Bellingham Marine Industries, Inc. UNIFLOAT®, UNIDECK®, and UNISTACK® are registered trademarks of Bellingham Marine Industries, Inc. © Bellingham Marine Industries, Inc.

SCALE:	As Noted
DRAWN BY:	D. Hildebrandt
CHECKED BY:	--
ENGINEER/DESIGNER:	-- (-)
SHEET:	9 of 43
Drawing Number:	EL4

City Of Redwood

ACCEPTED BY: _____ R.C.E. EXP. DATE

ACCEPTED BY: _____ CITY ENGINEER R.C.E. EXP. DATE

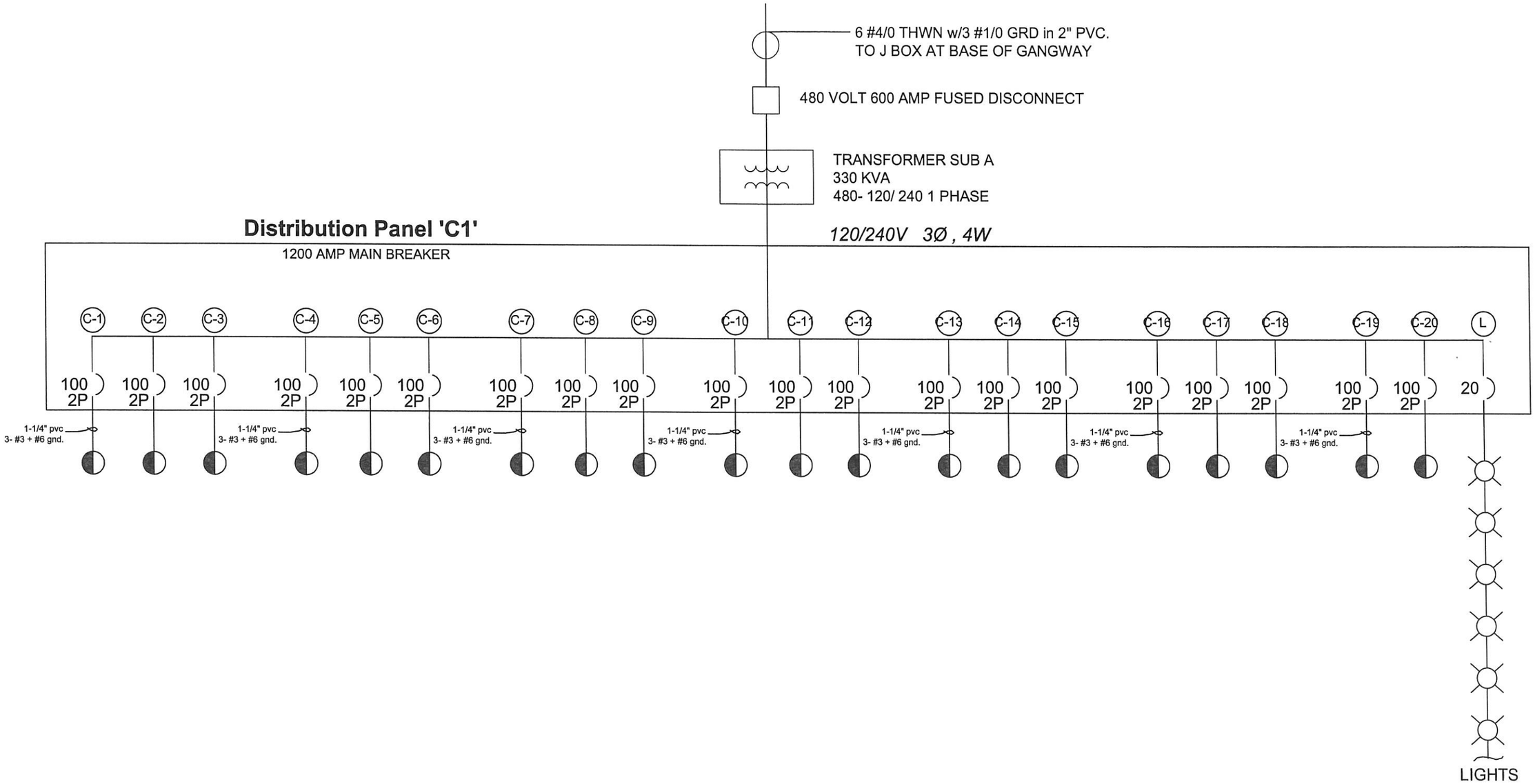

NO.	DATE	DESCRIPTION	BY
1			
2			
3			
4			
5	-	-	-

REVISIONS

Project Number: 06-3-442

PROJECT MANAGER _

Westpoint Marina
Redwood City, Ca.

Single Line Diagram Dock C

Bellingham MARINE
Innovative harbor and waterfront solutions
UNIFLOAT. precision engineered floatation systems

This drawing contains proprietary information which is the property of Bellingham Marine Industries, Inc., and shall not be copied, reproduced or made available to third parties without prior written permission from Bellingham Marine Industries, Inc. UNIFLOAT®, UNIDECK® and UNISTACK® are registered trademarks of Bellingham Marine Industries, Inc. © Bellingham Marine Industries, Inc.

SCALE:	As Noted
DRAWN BY:	D. Hildebrandt
CHECKED BY:	_
ENGINEER/DESIGNER:	_ (-)
SHEET:	10 of 43
Drawing Number:	EL5

City Of Redwood

ACCEPTED BY: _____ R.C.E. EXP. DATE

ACCEPTED BY: _____ CITY ENGINEER R.C.E. EXP. DATE

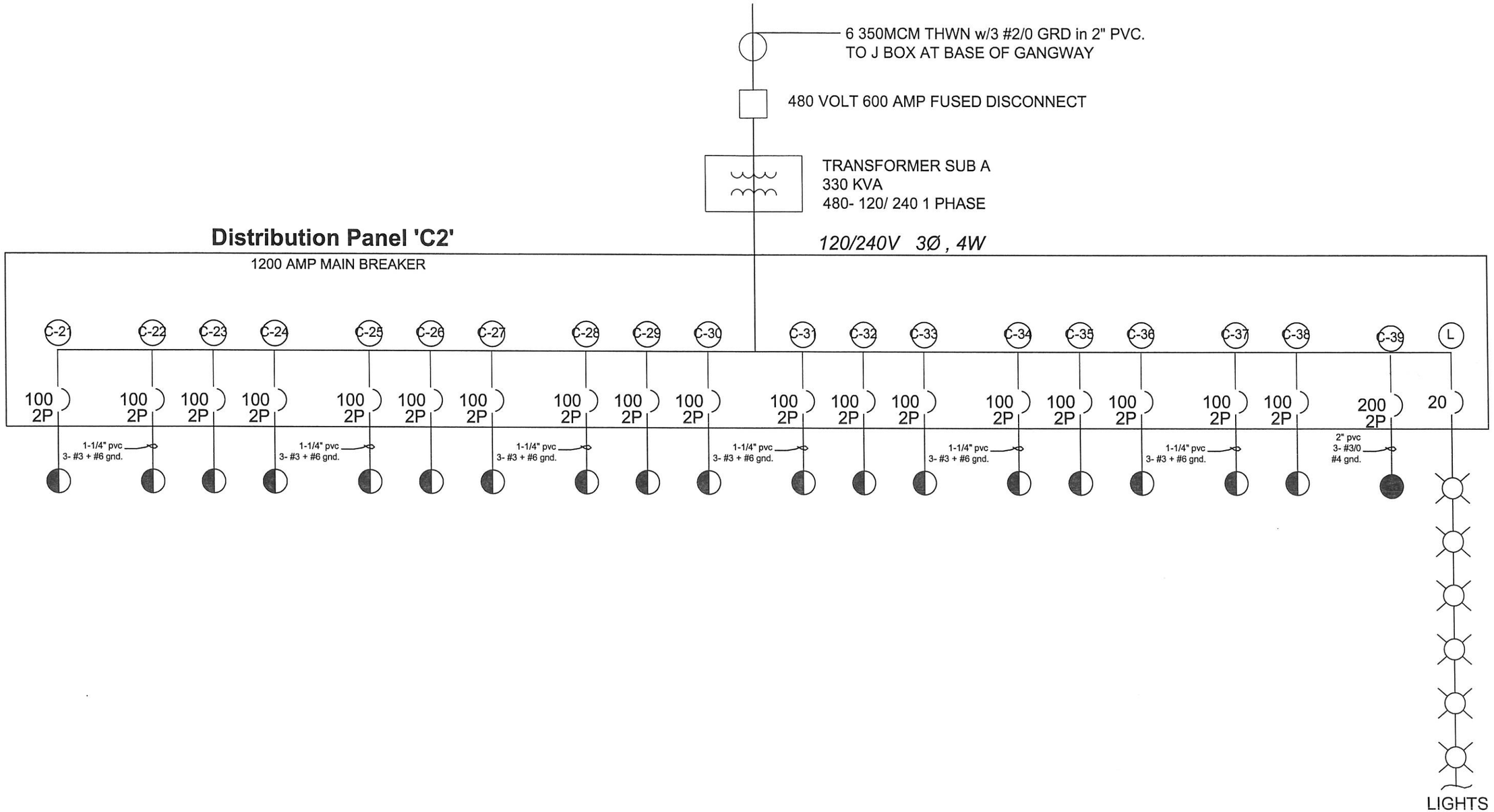

NO.	DATE	DESCRIPTION	BY
	-	-	-

REVISIONS

Project Number:

06-3-442

PROJECT MANAGER _

Westpoint Marina

Redwood City, Ca.

Single Line Diagram Dock C

Bellingham MARINE
Innovative harbor and waterfront solutions

UNIFLOAT.
precision engineered floatation systems

This drawing contains proprietary information which is the property of Bellingham Marine Industries, Inc., and shall not be copied, reproduced or made available to third parties without prior written permission from Bellingham Marine Industries, Inc. UNIFLOAT®, UNIDECK® and UNISTACK® are registered trademarks of Bellingham Marine Industries, Inc. © Bellingham Marine Industries, Inc.

SCALE: As Noted
DRAWN BY: D. Hildebrandt
CHECKED BY: _
ENGINEER/DESIGNER: _ (-)
SHEET: 11 of 43
Drawing Number: EL6

City Of Redwood

ACCEPTED BY: _____ R.C.E. EXP. DATE
ACCEPTED BY: _____ CITY ENGINEER R.C.E. EXP. DATE

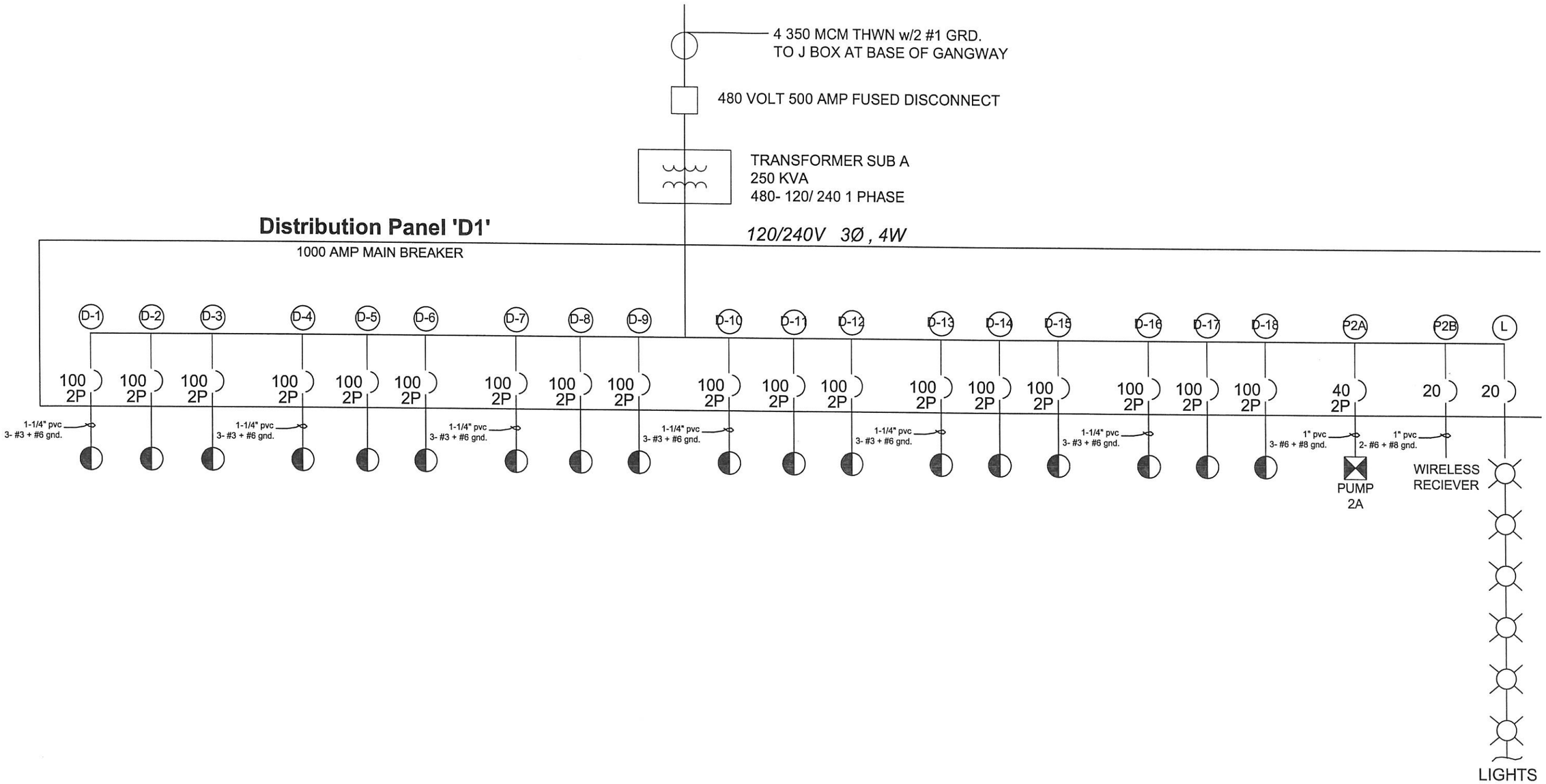

NO.	DATE	DESCRIPTION	BY
	-	-	-

REVISIONS

Project Number:

06-3-442

PROJECT MANAGER _

Westpoint Marina

Redwood City, Ca.

Single Line Diagram Dock D

Bellingham MARINE
Innovative harbor and waterfront solutions

UNIFLOAT.
precision engineered floatation systems

This drawing contains proprietary information which is the property of Bellingham Marine Industries, Inc., and shall not be copied, reproduced or made available to third parties without prior written permission from Bellingham Marine Industries, Inc. UNIFLOAT®, UNIDECK® and UNISTACK® are registered trademarks of Bellingham Marine Industries, Inc. © Bellingham Marine Industries, Inc.

SCALE: As Noted
DRAWN BY: D. Hildebrandt
CHECKED BY: _
ENGINEER/DESIGNER: _ (-)
SHEET: 12 of 43
Drawing Number: EL7

City Of Redwood

ACCEPTED BY: _____ R.C.E. EXP. DATE
ACCEPTED BY: CITY ENGINEER R.C.E. EXP. DATE

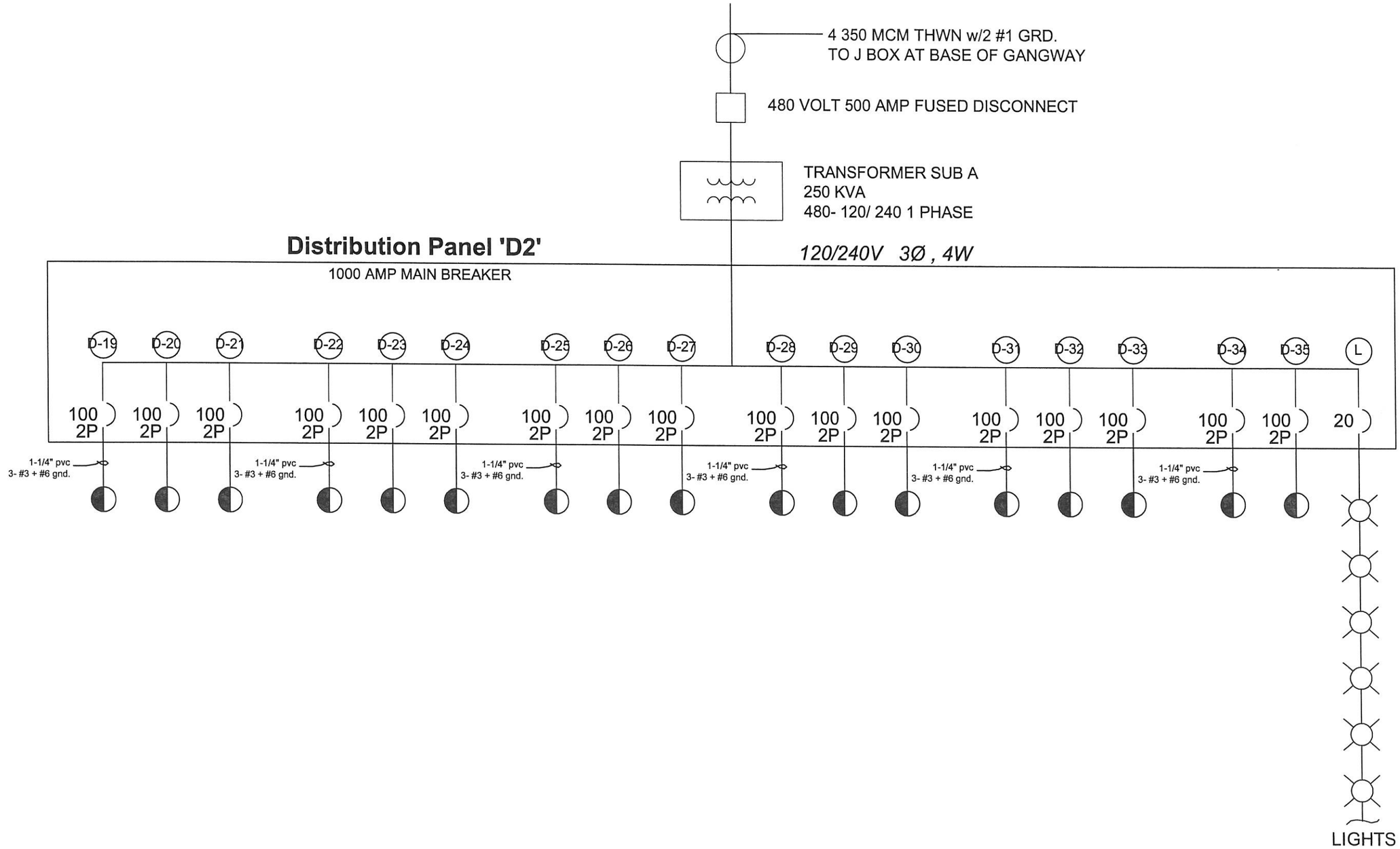

NO.	DATE	DESCRIPTION	BY
-	-		-

REVISIONS

Project Number:

06-3-442

PROJECT MANAGER _

Westpoint Marina

Redwood City, Ca.

Single Line Diagram Dock D

Bellingham MARINE
Innovative harbor and waterfront solutions

UNIFLOAT.

This drawing contains proprietary information which is the property of Bellingham Marine Industries, Inc., and shall not be copied, reproduced or made available to third parties without prior written permission from Bellingham Marine Industries, Inc. UNIFLOAT®, UNIDECK® and UNISTACK® are registered trademarks of Bellingham Marine Industries, Inc. © Bellingham Marine Industries, Inc.

SCALE: As Noted
DRAWN BY: D. Hildebrandt
CHECKED BY: _
ENGINEER/DESIGNER: _ (-)
SHEET: 13 of 43
Drawing Number: EL8

City Of Redwood

ACCEPTED BY: _____ R.C.E. EXP. DATE
ACCEPTED BY: _____ CITY ENGINEER R.C.E. EXP. DATE

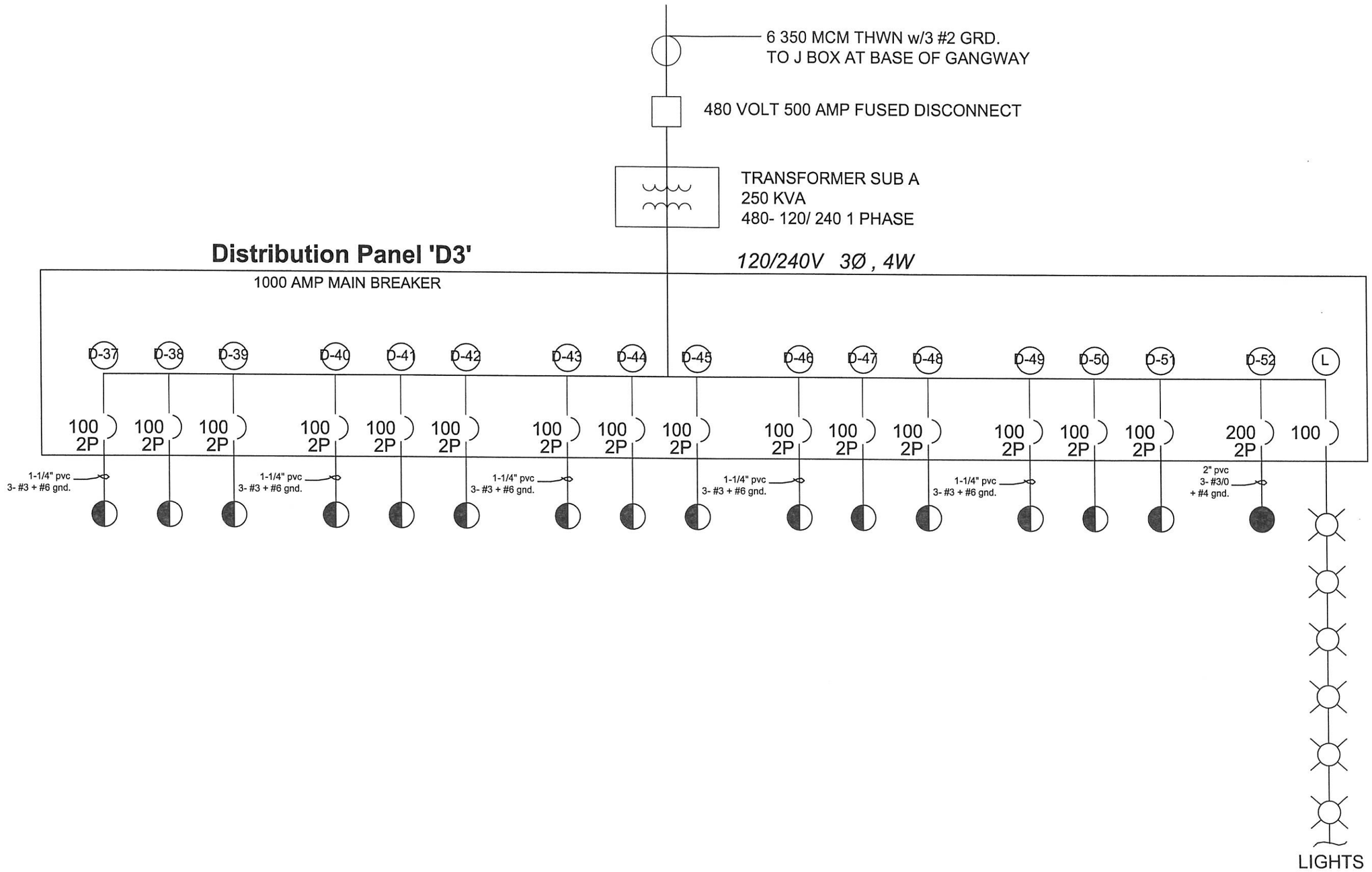

NO.	DATE	DESCRIPTION	BY
△			
△			
△			
△			
△	-	-	-

REVISIONS

Project Number:
06-3-442

PROJECT MANAGER _

Westpoint Marina
Redwood City, Ca.

Single Line Diagram Dock D

Bellingham MARINE. UNIFLOAT.
Innovative harbor and waterfront solutions

This drawing contains proprietary information which is the property of Bellingham Marine Industries, Inc., and shall not be copied, reproduced or made available to third parties without prior written permission from Bellingham Marine Industries, Inc. UNIFLOAT®, UNIDECK® and UNISTACK® are registered trademarks of Bellingham Marine Industries, Inc. © Bellingham Marine Industries, Inc.

SCALE:	As Noted
DRAWN BY:	D. Hildebrandt
CHECKED BY:	_
ENGINEER/DESIGNER:	_ (-)
SHEET:	14 of 43
Drawing Number:	EL9

City Of Redwood

ACCEPTED BY: _____ R.C.E. EXP. DATE

ACCEPTED BY: _____ CITY ENGINEER R.C.E. EXP. DATE

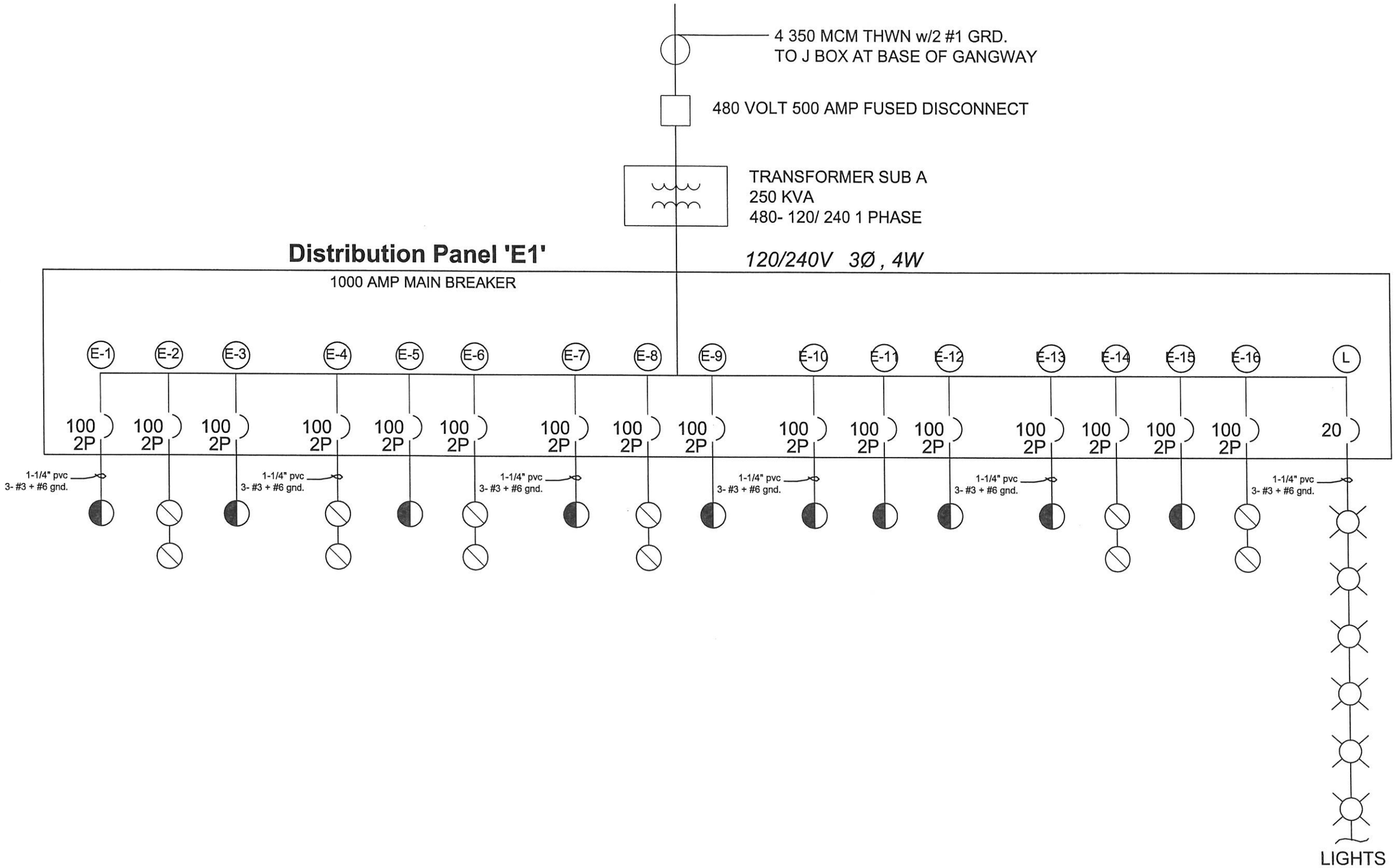

NO.	DATE	DESCRIPTION	BY
△			
△			
△			
△			
△	-	-	-

REVISIONS

Project Number:

06-3-442

PROJECT MANAGER _

Westpoint Marina

Redwood City, Ca.

Single Line Diagram Dock E

Bellingham MARINE — Innovative harbor and waterfront solutions

UNIFLOAT — precision engineered fixation systems

This drawing contains proprietary information which is the property of Bellingham Marine Industries, Inc., and shall not be copied, reproduced or made available to third parties without prior written permission from Bellingham Marine Industries, Inc. UNIFLOAT®, UNIDECK® and UNISTACK® are registered trademarks of Bellingham Marine Industries, Inc. © Bellingham Marine Industries, Inc.

SCALE:	As Noted
DRAWN BY:	D. Hildebrandt
CHECKED BY:	_
ENGINEER/DESIGNER:	— (-)
SHEET:	15 of 43
Drawing Number:	EL10

City Of Redwood

ACCEPTED BY: _____ R.C.E. EXP. DATE

ACCEPTED BY: _____ CITY ENGINEER R.C.E. EXP. DATE

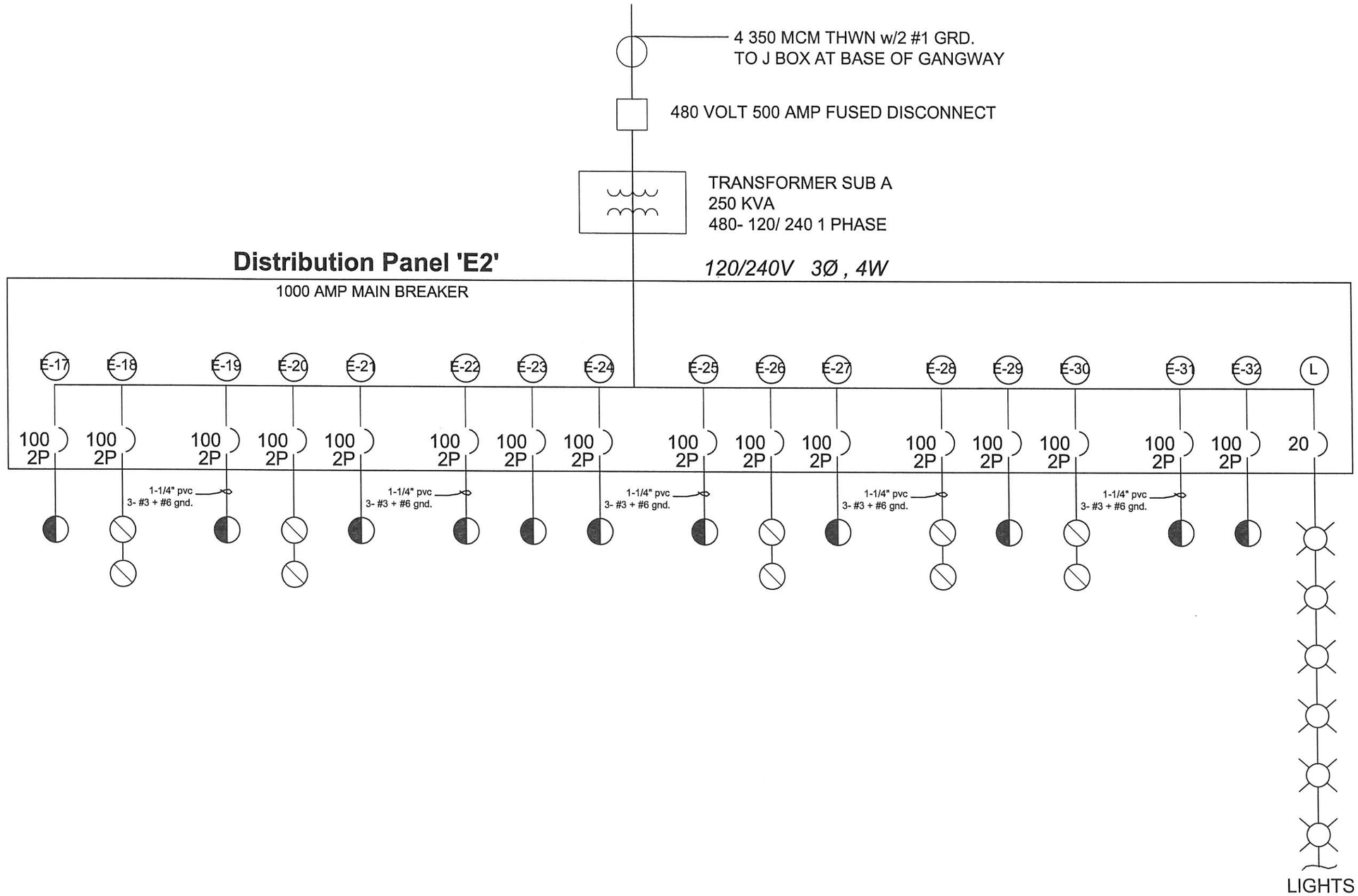

NO.	DATE	DESCRIPTION	BY
-	-		-

REVISIONS

Project Number: 06-3-442

PROJECT MANAGER _

Westpoint Marina
Redwood City, Ca.

Single Line Diagram Dock E

Bellingham MARINE
Innovative harbor and waterfront solutions
UNIFLOAT

This drawing contains proprietary information which is the property of Bellingham Marine Industries, Inc., and shall not be copied, reproduced or made available to third parties without prior written permission from Bellingham Marine Industries, Inc. UNIFLOAT®, UNIDECK® and UNISTACK® are registered trademarks of Bellingham Marine Industries, Inc. © Bellingham Marine Industries, Inc.

SCALE: As Noted
DRAWN BY: D. Hildebrandt
CHECKED BY: _
ENGINEER/DESIGNER: _ (-)
SHEET: 16 of 43
Drawing Number: EL11

City Of Redwood

ACCEPTED BY: _____ R.C.E. EXP. DATE
ACCEPTED BY: CITY ENGINEER R.C.E. EXP. DATE

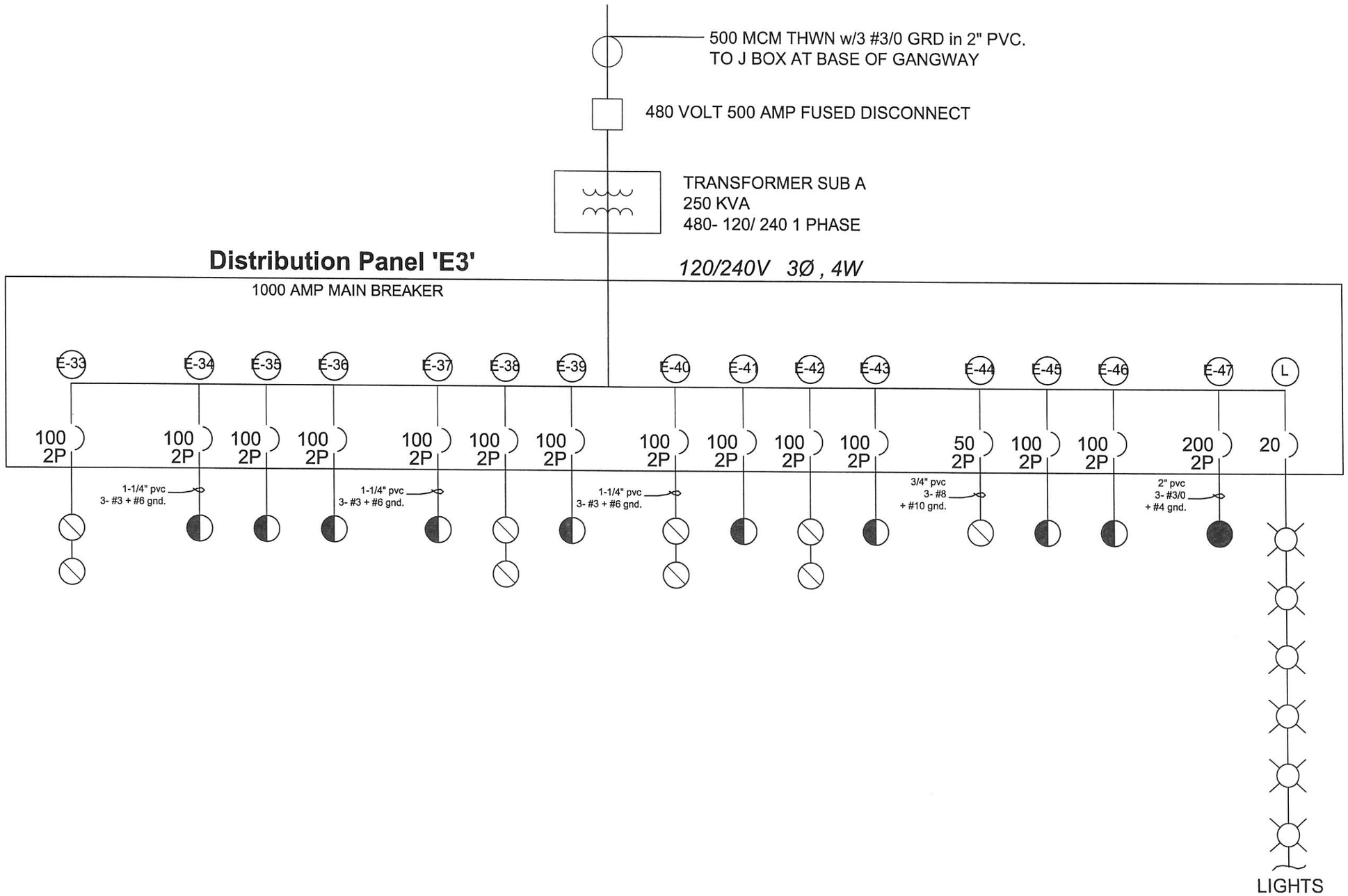

NO.	DATE	DESCRIPTION	BY
	-	-	-

REVISIONS

Project Number:

06-3-442

PROJECT MANAGER _

Westpoint Marina

Redwood City, Ca.

Single Line Diagram Dock E

Bellingham MARINE. UNIFLOAT.

Innovative harbor and waterfront solutions

This drawing contains proprietary information which is the property of Bellingham Marine Industries, Inc., and shall not be copied, reproduced or made available to third parties without prior written permission from Bellingham Marine Industries, Inc. UNIFLOAT®, UNIDECK® and UNISTACK® are registered trademarks of Bellingham Marine Industries, Inc. © Bellingham Marine Industries, Inc.

SCALE: As Noted

DRAWN BY: D. Hildebrandt

CHECKED BY: _

ENGINEER/DESIGNER: _ (-)

SHEET: 17 of 43

Drawing Number: EL12

City Of Redwood

ACCEPTED BY: _____ R.C.E. EXP. DATE

ACCEPTED BY: _____ CITY ENGINEER R.C.E. EXP. DATE

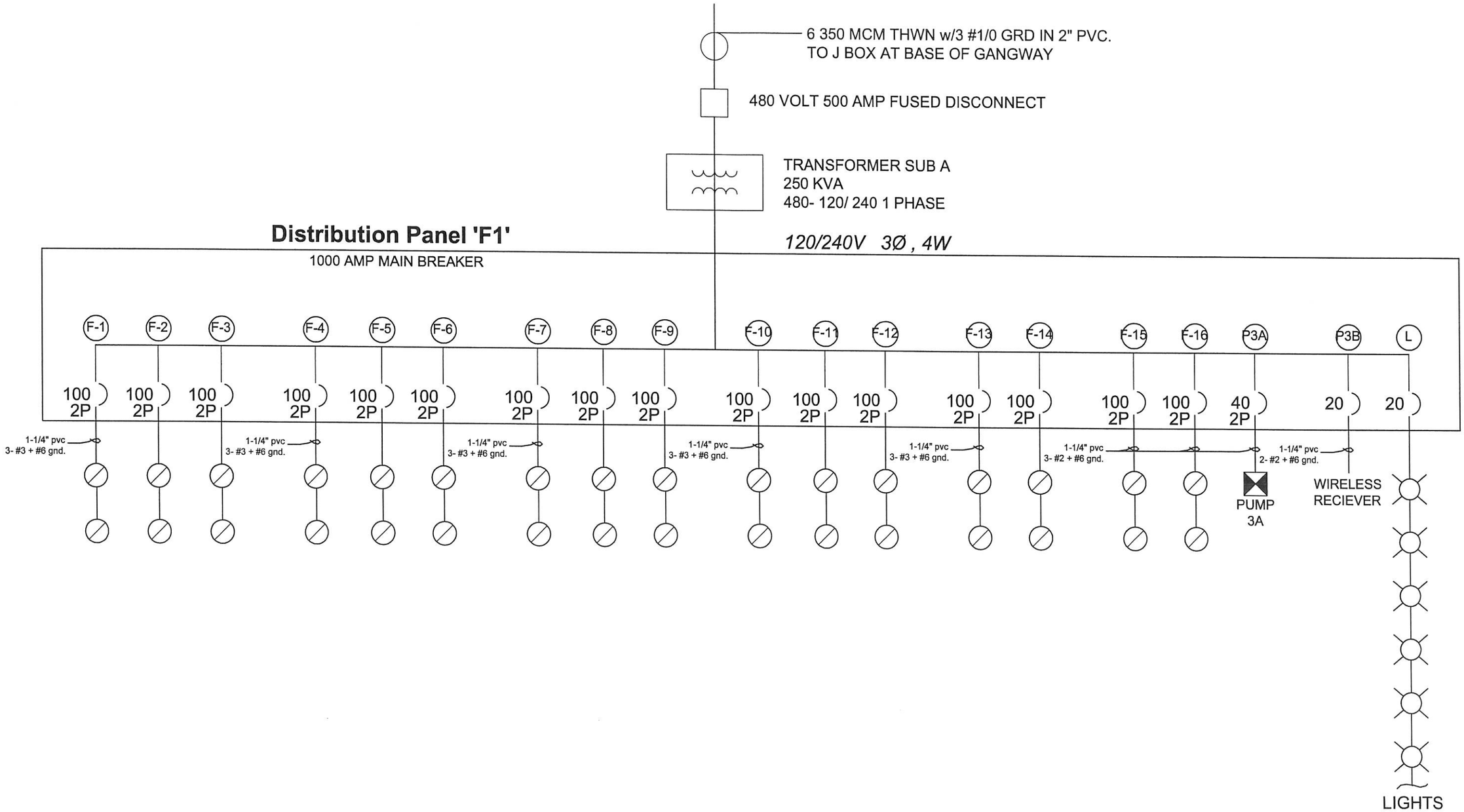

NO.	DATE	DESCRIPTION	BY
1			
2			
3			
4			
5	-	-	-

REVISIONS

Project Number:

06-3-442

PROJECT MANAGER _

Westpoint Marina

Redwood City, Ca.

Single Line Diagram Dock F

Bellingham MARINE
Innovative harbor and waterfront solutions

UNIFLOAT.
precision engineered floatation systems

This drawing contains proprietary information which is the property of Bellingham Marine Industries, Inc., and shall not be copied, reproduced or made available to third parties without prior written permission from Bellingham Marine Industries, Inc. UNIFLOATR, UNIDECKR and UNISTACKR are registered trademarks of Bellingham Marine Industries, Inc. © Bellingham Marine Industries, Inc.

SCALE:	As Noted
DRAWN BY:	D. Hildebrandt
CHECKED BY:	--
ENGINEER/DESIGNER:	-- (-)
SHEET:	18 of 43
Drawing Number:	EL13

City Of Redwood

ACCEPTED BY: _____ R.C.E. EXP. DATE

ACCEPTED BY: _____ CITY ENGINEER R.C.E. EXP. DATE

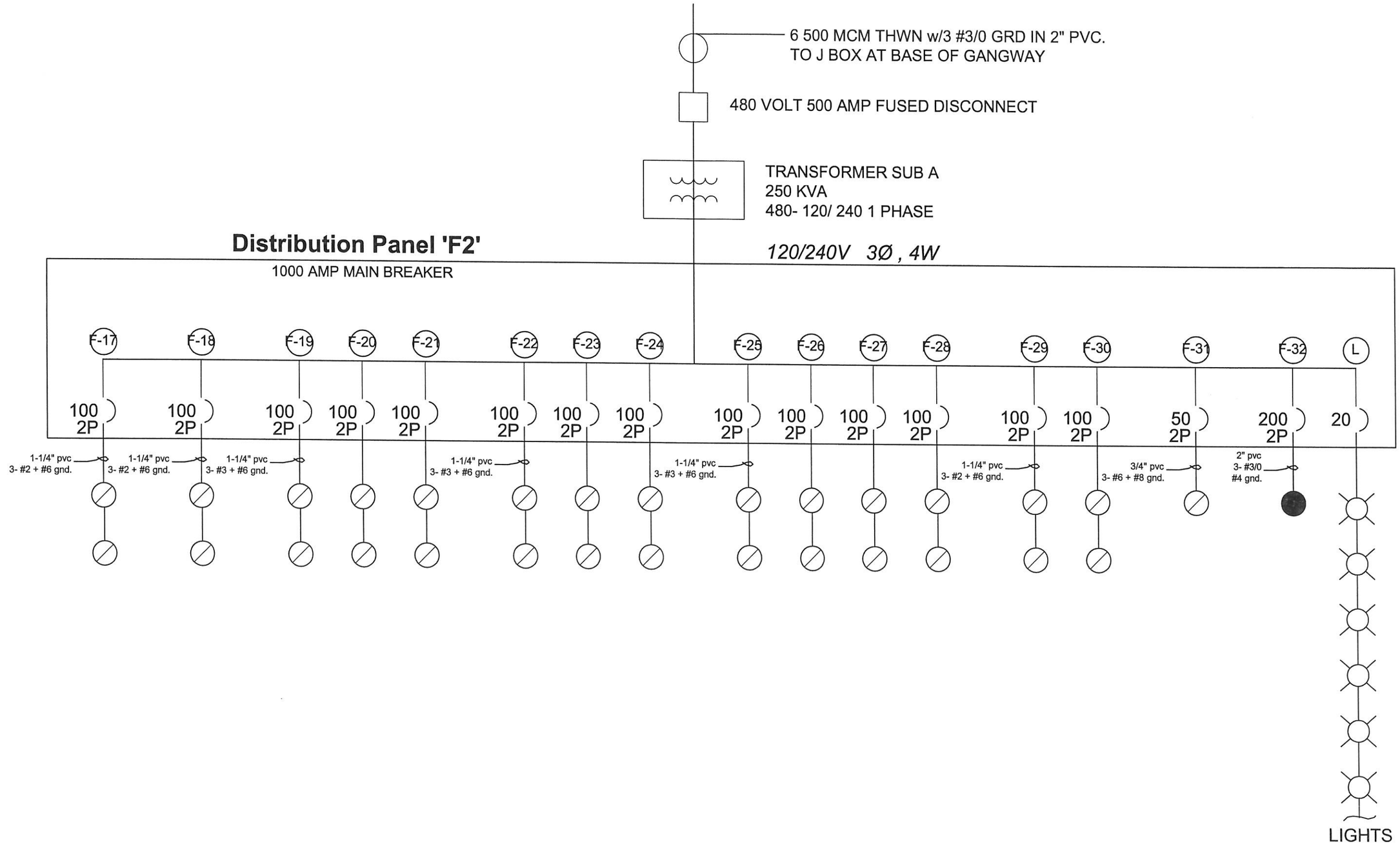

NO.	DATE	DESCRIPTION	BY
-	-	-	-

REVISIONS

Project Number:

06-3-442

PROJECT MANAGER _

Westpoint Marina

Redwood City, Ca.

Single Line Diagram Dock F

Bellingham MARINE
Innovative harbor and waterfront solutions

UNIFLOAT.

This drawing contains proprietary information which is the property of Bellingham Marine Industries, Inc., and shall not be copied, reproduced or made available to third parties without prior written permission from Bellingham Marine Industries, Inc. UNIFLOAT®, UNIDECK® and UNISTACK® are registered trademarks of Bellingham Marine Industries, Inc. © Bellingham Marine Industries, Inc.

SCALE:	As Noted
DRAWN BY:	D. Hildebrandt
CHECKED BY:	–
ENGINEER/DESIGNER:	– (–)
SHEET:	19 of 43
Drawing Number:	EL14

City Of Redwood

ACCEPTED BY: _____ R.C.E. EXP. DATE

ACCEPTED BY: _____ CITY ENGINEER R.C.E. EXP. DATE

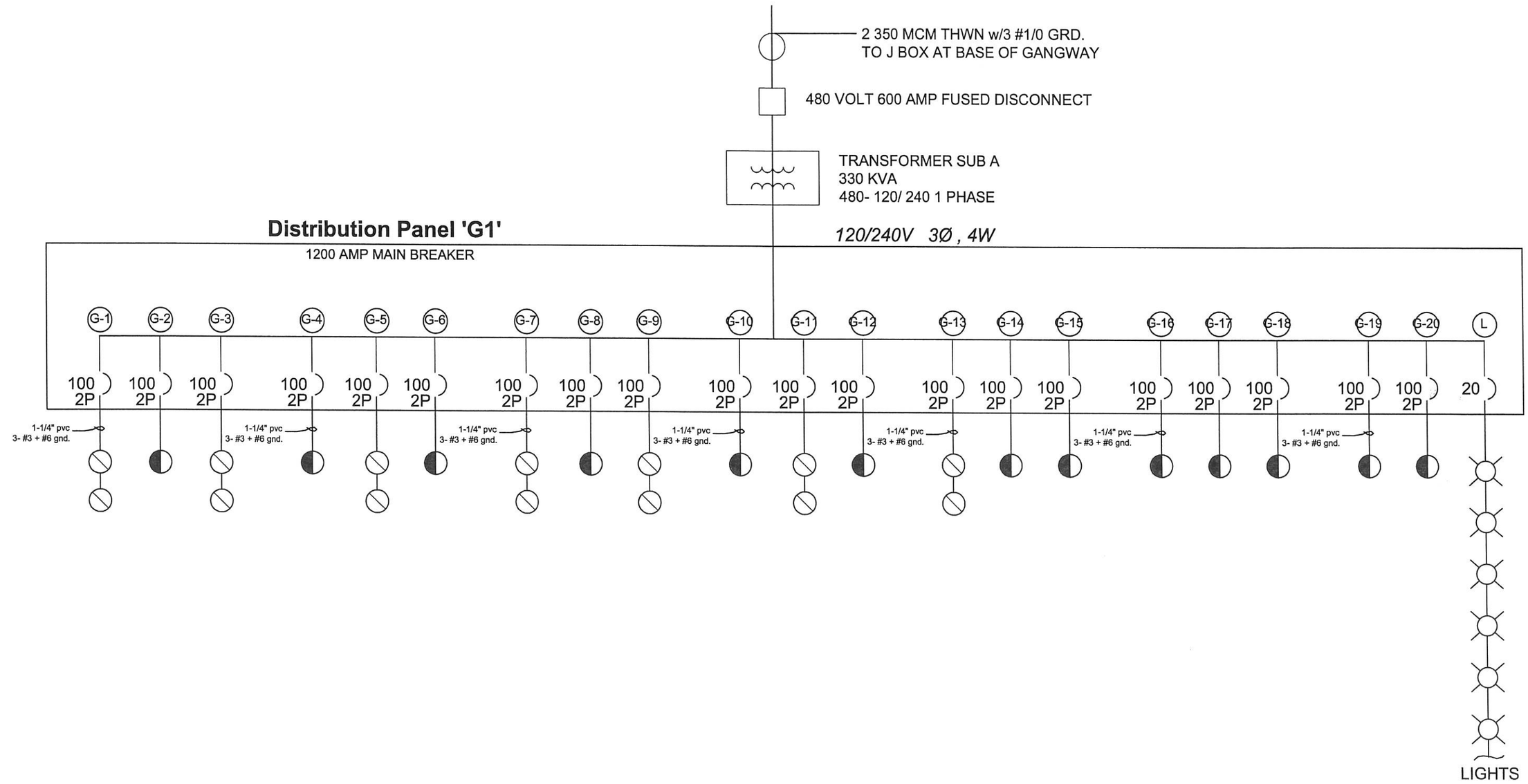

NO.	DATE	DESCRIPTION	BY
△			
△			
△			
△			
△	-	-	-

REVISIONS

Project Number:

06-3-442

PROJECT MANAGER _

Westpoint Marina

Redwood City, Ca.

Single Line Diagram Dock G

Bellingham MARINE
Innovative harbor and waterfront solutions

UNIFLOAT
precision engineered floation systems

This drawing contains proprietary information which is the property of Bellingham Marine Industries, Inc., and shall not be copied, reproduced or made available to third parties without prior written permission from Bellingham Marine Industries, Inc. UNIFLOAT®, UNIDECK® and UNISTACK® are registered trademarks of Bellingham Marine Industries, Inc. © Bellingham Marine Industries, Inc.

SCALE:	As Noted
DRAWN BY:	D. Hildebrandt
CHECKED BY:	_
ENGINEER/DESIGNER:	— (-)
SHEET:	20 of 43
Drawing Number:	EL15

City Of Redwood

ACCEPTED BY: _____ R.C.E. EXP. DATE

ACCEPTED BY: _____ CITY ENGINEER R.C.E. EXP. DATE

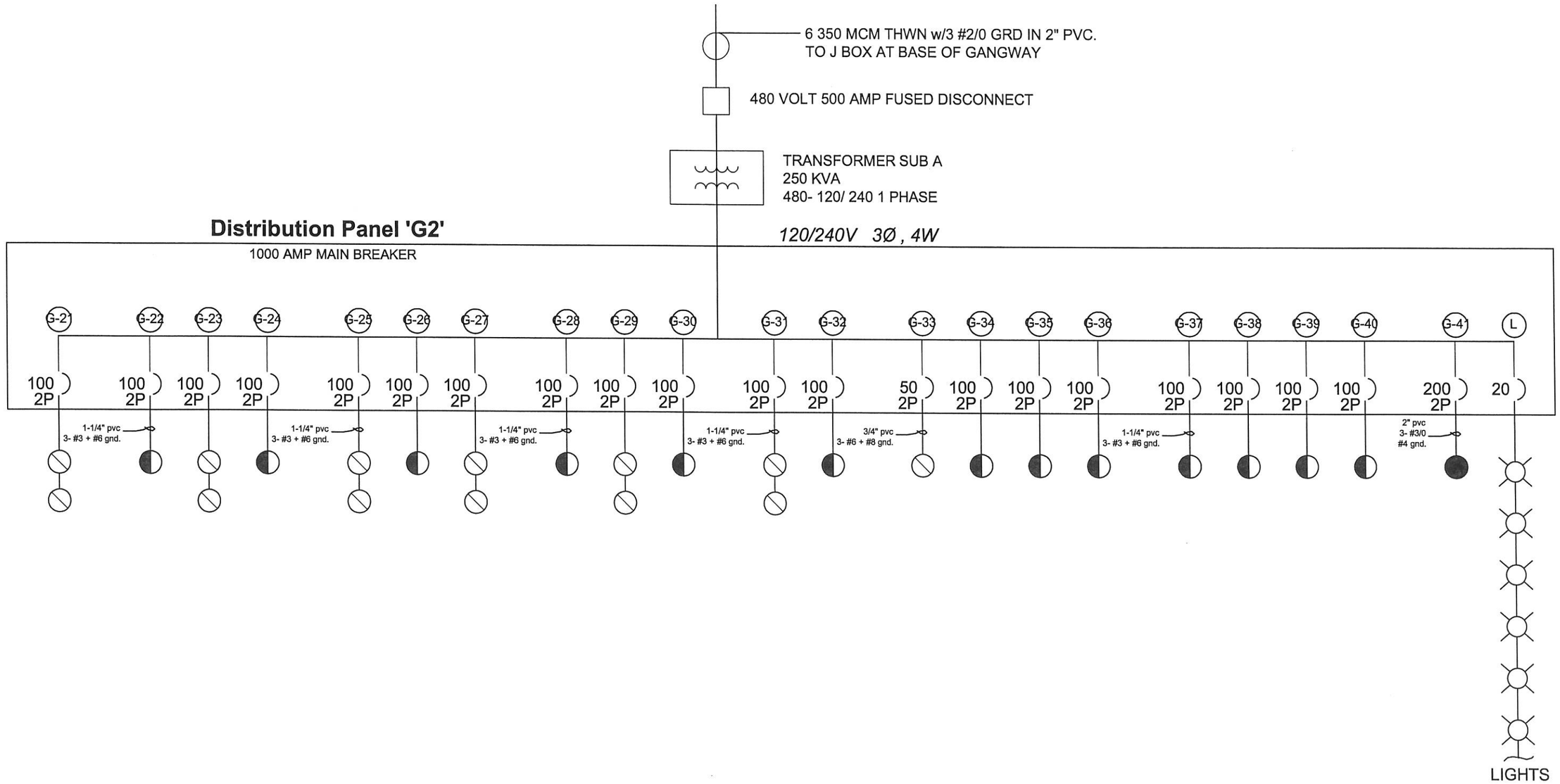

NO.	DATE	DESCRIPTION	BY
-	-		-

REVISIONS

Project Number: 06-3-442

PROJECT MANAGER _

Westpoint Marina
Redwood City, Ca.

Single Line Diagram Dock G

Bellingham MARINE
Innovative harbor and waterfront solutions

UNIFLOAT.

This drawing contains proprietary information which is the property of Bellingham Marine Industries, Inc., and shall not be copied, reproduced or made available to third parties without prior written permission from Bellingham Marine Industries, Inc. UNIFLOAT®, UNIDECK® and UNISTACK® are registered trademarks of Bellingham Marine Industries, Inc. © Bellingham Marine Industries, Inc.

SCALE: As Noted
DRAWN BY: D. Hildebrandt
CHECKED BY: _
ENGINEER/DESIGNER: _ (-)
SHEET: 21 of 43
Drawing Number: EL16

City Of Redwood

ACCEPTED BY: _____ R.C.E. EXP. DATE
ACCEPTED BY: _____ CITY ENGINEER R.C.E. EXP. DATE

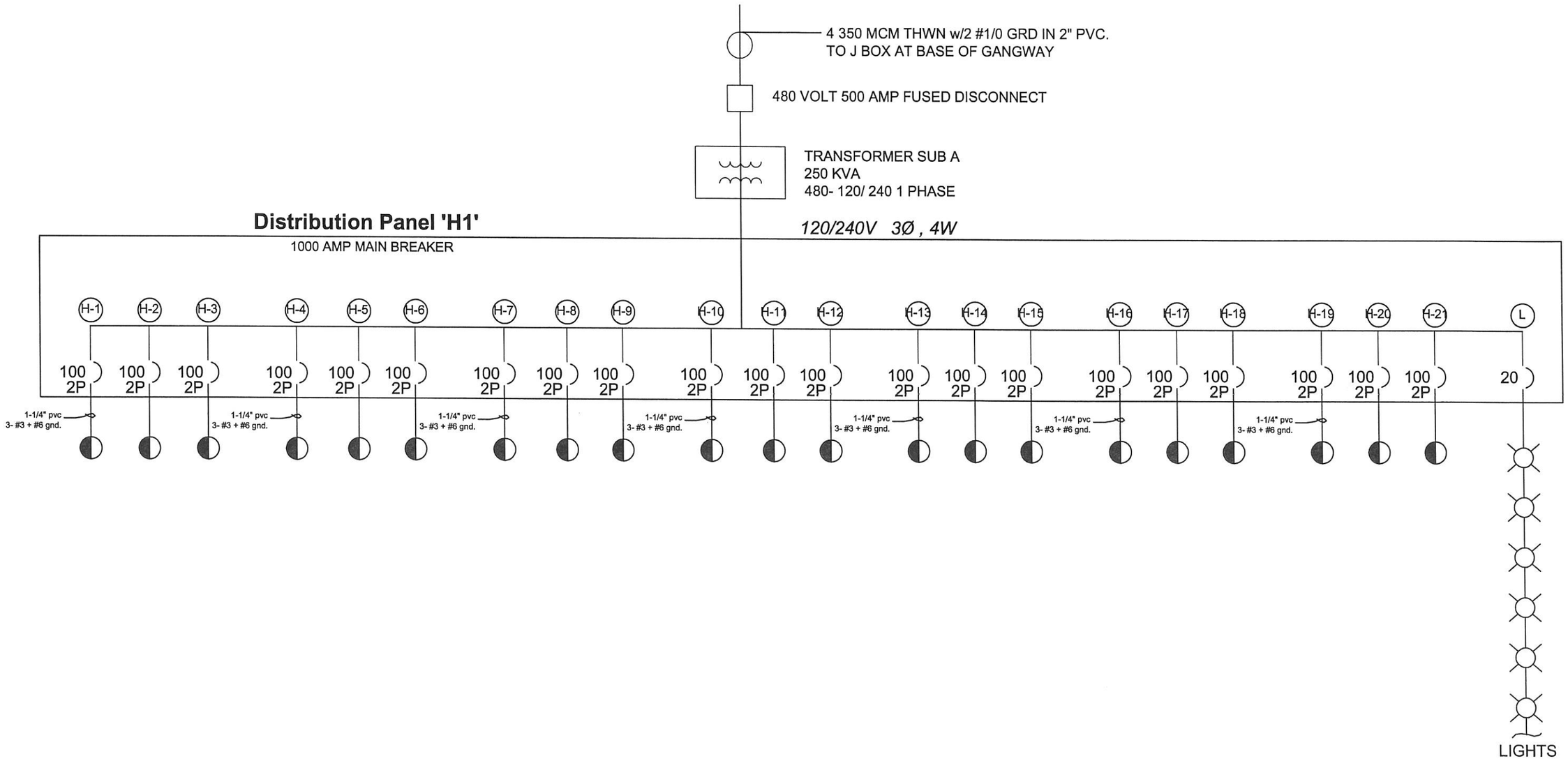

NO.	DATE	DESCRIPTION	BY

REVISIONS

Project Number: 06-3-442

PROJECT MANAGER _

Westpoint Marina
Redwood City, Ca.

Single Line Diagram Dock H

Bellingham MARINE
Innovative harbor and waterfront solutions

UNIFLOAT.
precast engineered floatation systems

This drawing contains proprietary information which is the property of Bellingham Marine Industries, Inc., and shall not be copied, reproduced or made available to third parties without prior written permission from Bellingham Marine Industries, Inc. UNIFLOAT®, UNIDECK® and UNISTACK® are registered trademarks of Bellingham Marine Industries, Inc. © Bellingham Marine Industries, Inc.

SCALE: As Noted
DRAWN BY: D. Hildebrandt
CHECKED BY: _
ENGINEER/DESIGNER: _ (-)
SHEET: 22 of 43
Drawing Number: EL17

City Of Redwood

ACCEPTED BY: _____ R.C.E. EXP. DATE
ACCEPTED BY: _____ CITY ENGINEER R.C.E. EXP. DATE

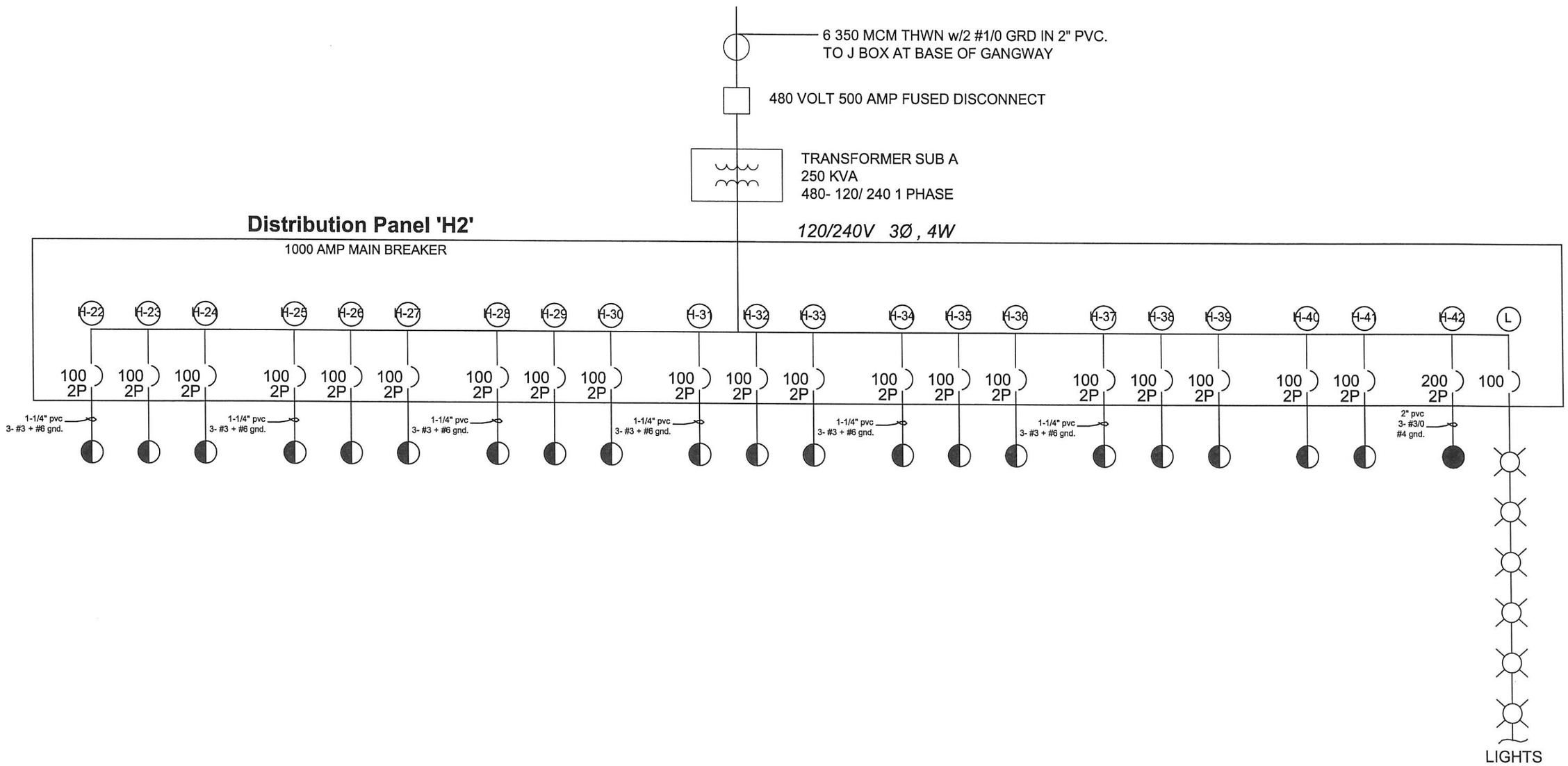

NO.	DATE	DESCRIPTION	BY

REVISIONS

Project Number: 06-3-442

PROJECT MANAGER _

Westpoint Marina
Redwood City, Ca.

Single Line Diagram Dock H

Bellingham MARINE
Innovative harbor and waterfront solutions
UNIFLOAT

This drawing contains proprietary information which is the property of Bellingham Marine Industries, Inc., and shall not be copied, reproduced or made available to third parties without prior written permission from Bellingham Marine Industries, Inc. UNIFLOAT®, UNIDECK® and UNISTACK® are registered trademarks of Bellingham Marine Industries, Inc. © Bellingham Marine Industries, Inc.

SCALE: As Noted
DRAWN BY: D. Hildebrandt
CHECKED BY: _
ENGINEER/DESIGNER: _ (-)
SHEET: 23 of 43
Drawing Number: EL18

City Of Redwood

ACCEPTED BY: _____ R.C.E. EXP. DATE
ACCEPTED BY: _____ CITY ENGINEER R.C.E. EXP. DATE

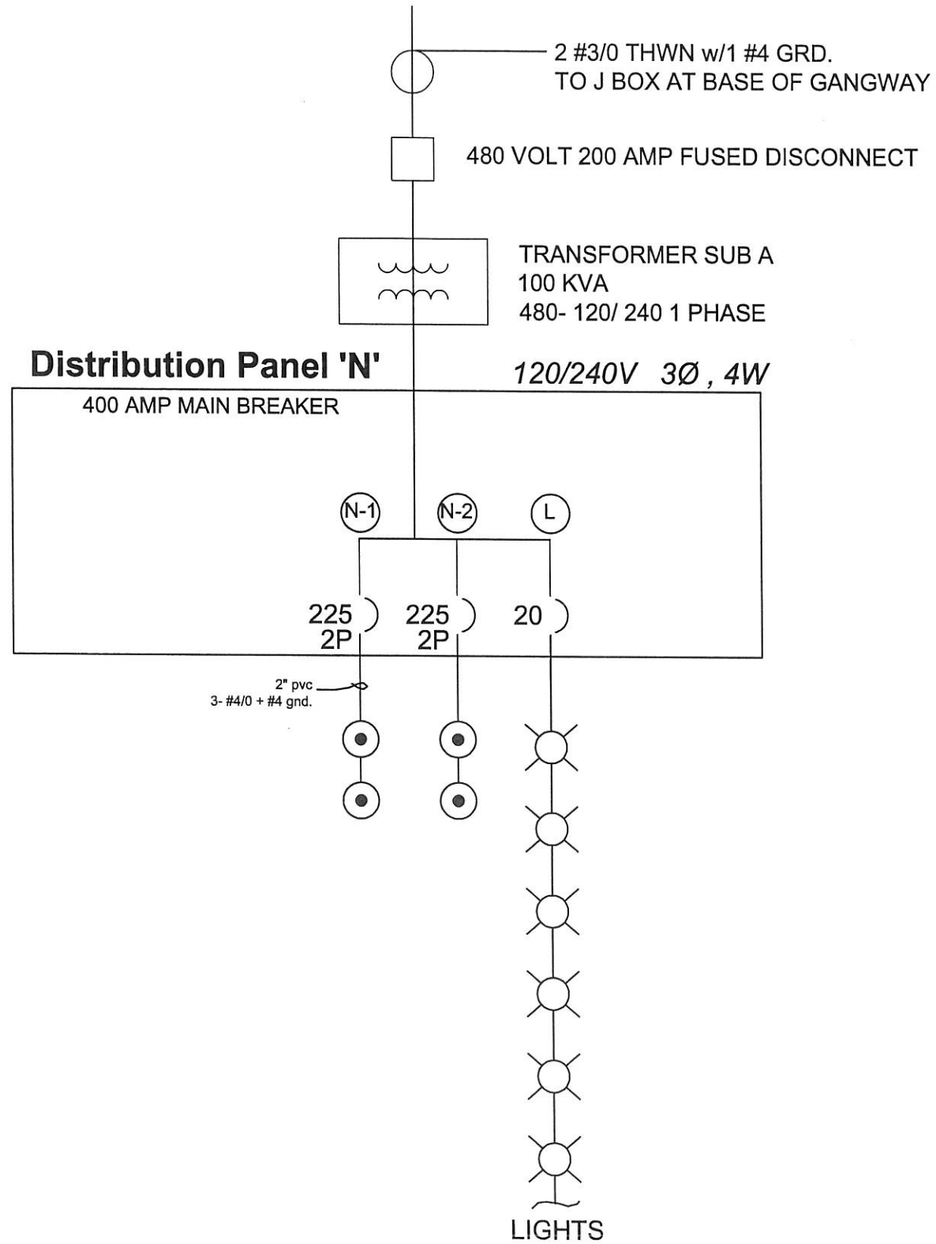

NO.	DATE	DESCRIPTION	BY
1	-	-	-
2			
3			
4			
5			

REVISIONS

Project Number:

06-3-442

PROJECT MANAGER _

Westpoint Marina

Redwood City, Ca.

Single Line Diagram Dock N

Bellingham MARINE

UNIFLOAT.

Innovative harbor and waterfront solutions

This drawing contains proprietary information which is the property of Bellingham Marine Industries, Inc., and shall not be copied, reproduced or made available to third parties without prior written permission from Bellingham Marine Industries, Inc. UNIFLOAT®, UNIDECK® and UNISTACK® are registered trademarks of Bellingham Marine Industries, Inc. © Bellingham Marine Industries, Inc.

SCALE:	As Noted
DRAWN BY:	D. Hildebrandt
CHECKED BY:	_
ENGINEER/DESIGNER:	_ (-)
SHEET:	24 of 43
Drawing Number:	EL19

City Of Redwood

ACCEPTED BY: _____ R.C.E. EXP. DATE

ACCEPTED BY: _____ CITY ENGINEER R.C.E. EXP. DATE

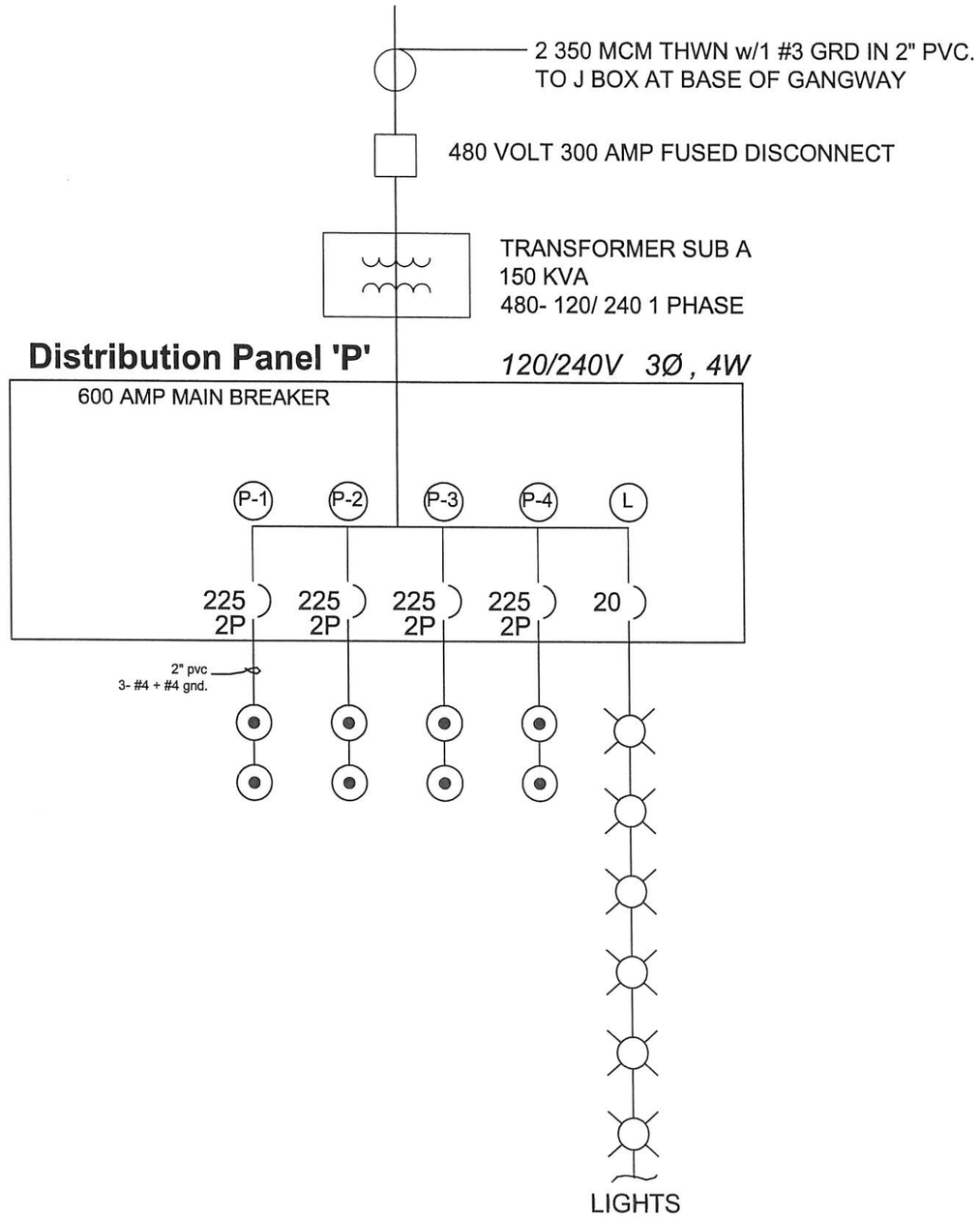

NO.	DATE	DESCRIPTION	BY
△			
△			
△			
△			
△	-	-	-

REVISIONS

Project Number:

06-3-442

PROJECT MANAGER _

Westpoint Marina

Redwood City, Ca.

Single Line Diagram Dock P

Bellingham MARINE. UNIFLOAT.

Innovative harbor and waterfront solutions

This drawing contains proprietary information which is the property of Bellingham Marine Industries, Inc., and shall not be copied, reproduced or made available to third parties without prior written permission from Bellingham Marine Industries, Inc. UNIFLOAT®, UNIDECK® and UNISTACK® are registered trademarks of Bellingham Marine Industries, Inc. © Bellingham Marine Industries, Inc.

SCALE:	As Noted
DRAWN BY:	D. Hildebrandt
CHECKED BY:	_
ENGINEER/DESIGNER:	— (-)
SHEET:	25 of 43
Drawing Number:	EL20

City Of Redwood

ACCEPTED BY: _____ R.C.E. EXP. DATE

ACCEPTED BY: _____ CITY ENGINEER R.C.E. EXP. DATE

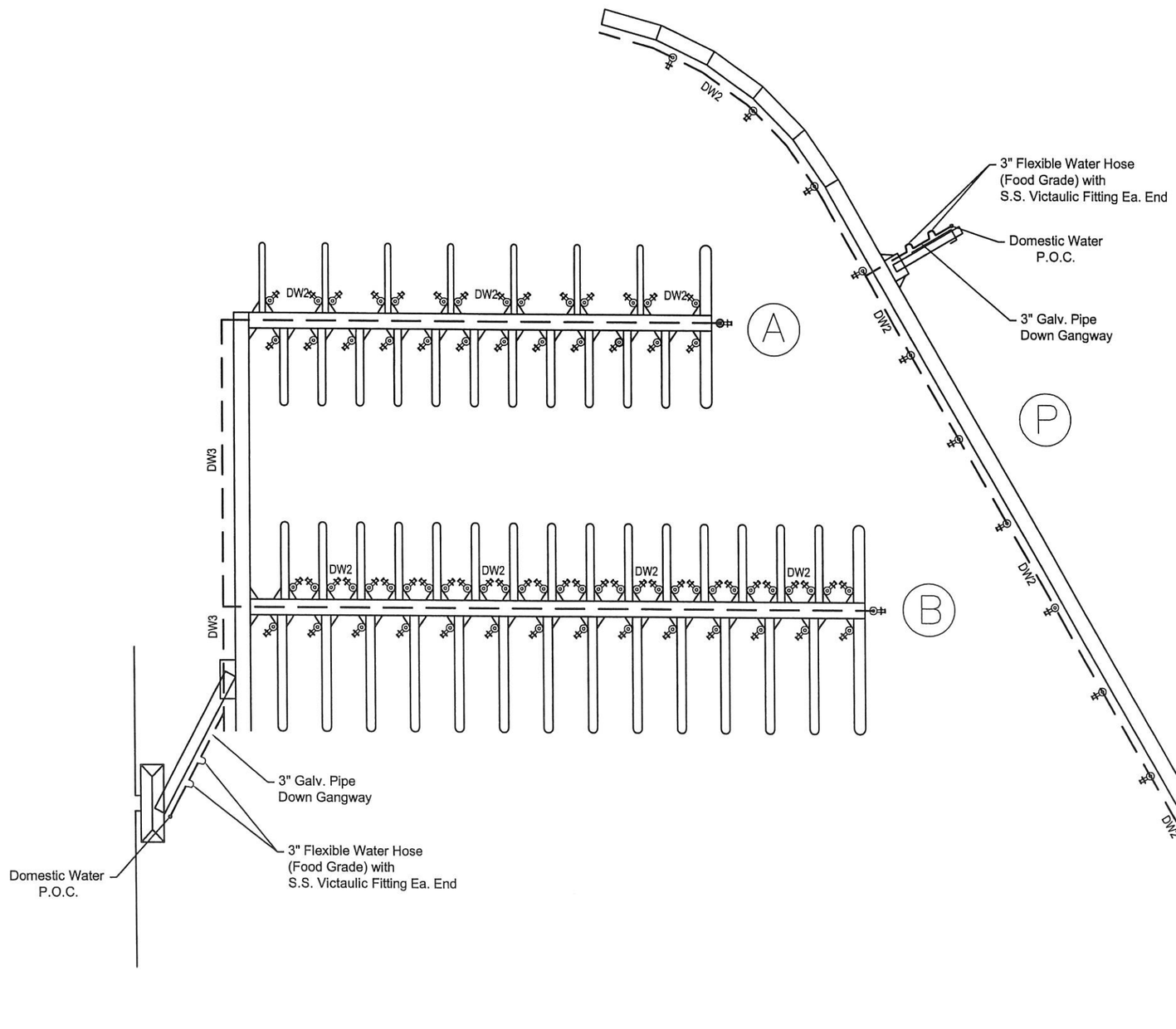

DW 3	= 3" HDPE PIPE REDUCE TO 3/4" @ MAIN RUN TO FEED ALL HOSEBIBBS
DW 2	= 2" HDPE PIPE REDUCE TO 3/4" @ MAIN RUN TO FEED ALL HOSEBIBBS
	= 3/4" HOSE BIBB (w/ Non-Removable Backflow Device)

DOMESTIC WATER PLAN

MAIN FEED AND ROUTING PLAN

ALL FEED LINES BETWEEN FLEX FITTING (DOWN GANGWAY) TO BE GALVANIZED

NO.	DATE	DESCRIPTION	BY
-	-		-

REVISIONS

Project Number: 06-3-442

PROJECT MANAGER _

Westpoint Marina
Redwood City, Ca.

Domestic Water Layout Dock A,B and P

Bellingham MARINE — Innovative harbor and waterfront solutions

UNIFLOAT — precast engineered floation systems

This drawing contains proprietary information which is the property of Bellingham Marine Industries, Inc., and shall not be copied, reproduced or made available to third parties without prior written permission from Bellingham Marine Industries, Inc. UNIFLOAT®, UNIDECK® and UNISTACK® are registered trademarks of Bellingham Marine Industries, Inc. © Bellingham Marine Industries, Inc.

SCALE:	As Noted
DRAWN BY:	D. Hildebrandt
CHECKED BY:	–
ENGINEER/DESIGNER:	– (–)
SHEET:	26 of 43
Drawing Number:	DL1

City Of Redwood

ACCEPTED BY: _____ R.C.E. EXP. DATE

ACCEPTED BY: _____ CITY ENGINEER R.C.E. EXP. DATE

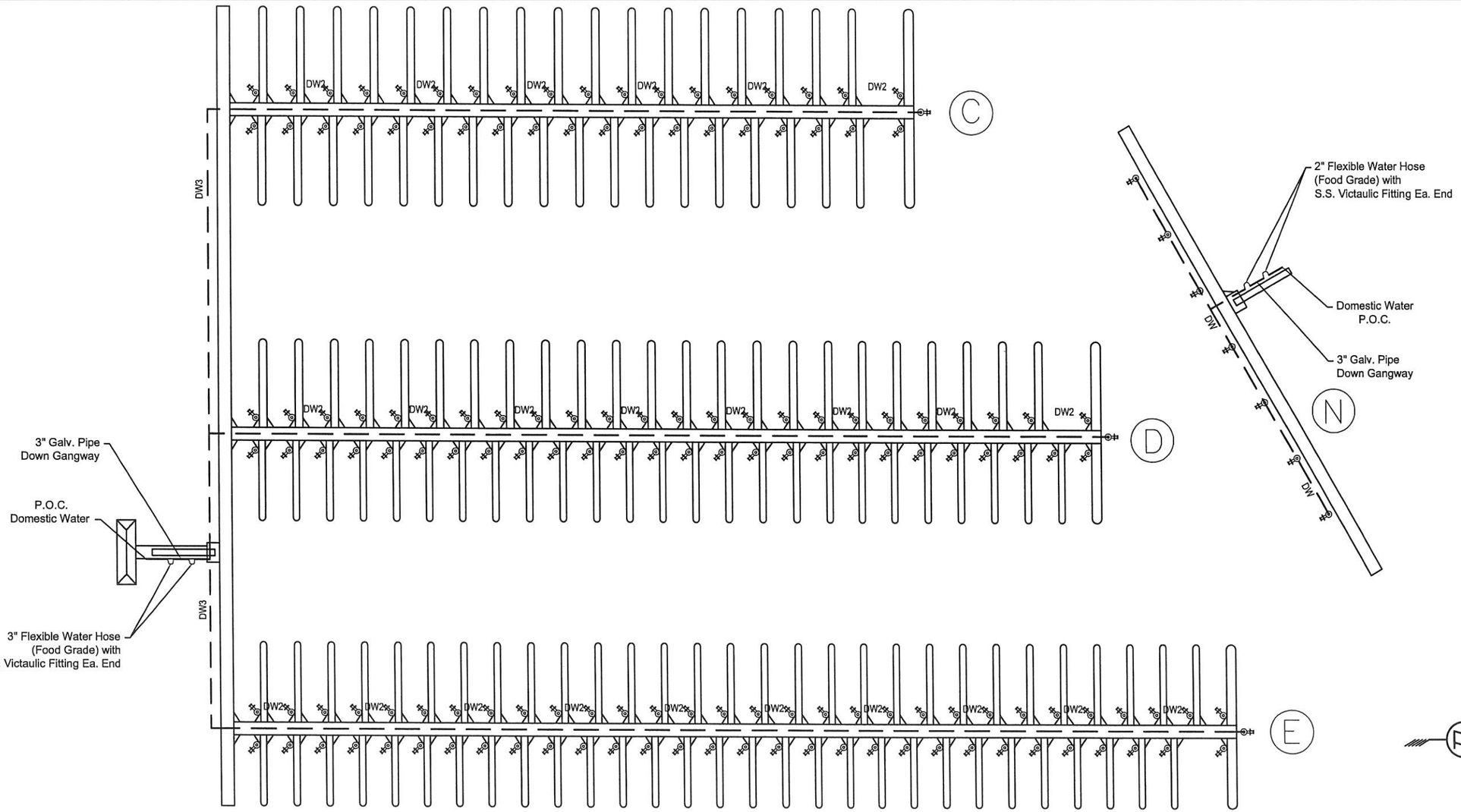

DW3	=	3" HDPE PIPE REDUCE TO 3/4" @ MAIN RUN TO FEED ALL HOSEBIBBS
DW2	=	2" HDPE PIPE REDUCE TO 3/4" @ MAIN RUN TO FEED ALL HOSEBIBBS
	=	3/4" HOSE BIBB (w/ Non-Removable Backflow Device)

DOMESTIC WATER PLAN

MAIN FEED AND ROUTING PLAN

ALL FEED LINES BETWEEN FLEX FITTING (DOWN GANGWAY) TO BE GALVANIZED

NO.	DATE	DESCRIPTION	BY

REVISIONS

Project Number: 06-3-442

PROJECT MANAGER _

Westpoint Marina
Redwood City, Ca.

Domestic Water Layout Dock C, D,E, F and N

Bellingham MARINE — Innovative harbor and waterfront solutions
UNIFLOAT — predator engineered floatation systems

This drawing contains proprietary information which is the property of Bellingham Marine Industries, Inc., and shall not be copied, reproduced or made available to third parties without prior written permission from Bellingham Marine Industries, Inc. UNIFLOAT®, UNIDECK® and UNISTACK® are registered trademarks of Bellingham Marine Industries, Inc. © Bellingham Marine Industries, Inc.

SCALE:	As Noted
DRAWN BY:	D. Hildebrandt
CHECKED BY:	_
ENGINEER/DESIGNER:	— (-)
SHEET:	27 of 43
Drawing Number:	DL2

City Of Redwood

ACCEPTED BY: _____ R.C.E. EXP. DATE

ACCEPTED BY: CITY ENGINEER R.C.E. EXP. DATE

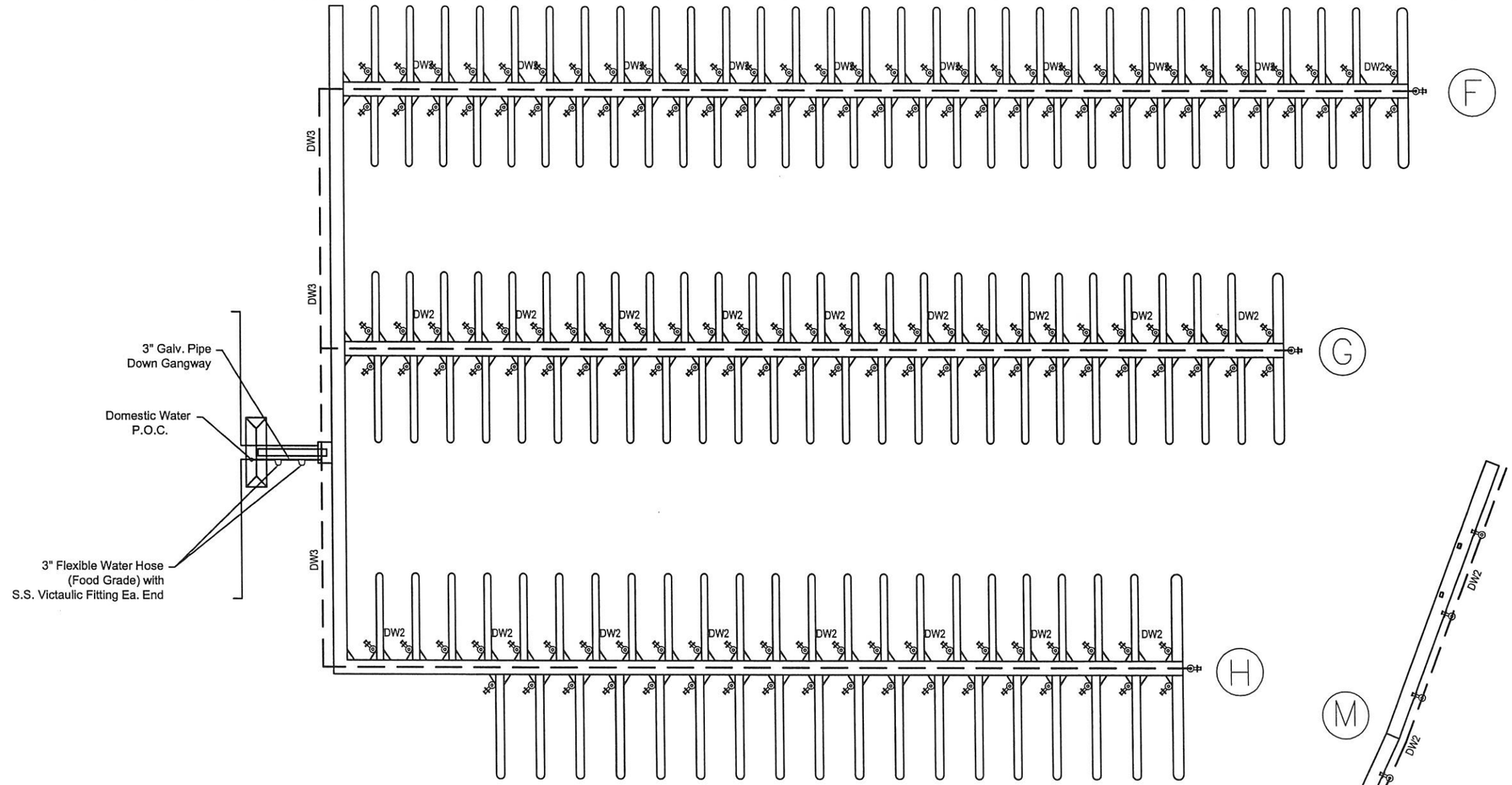

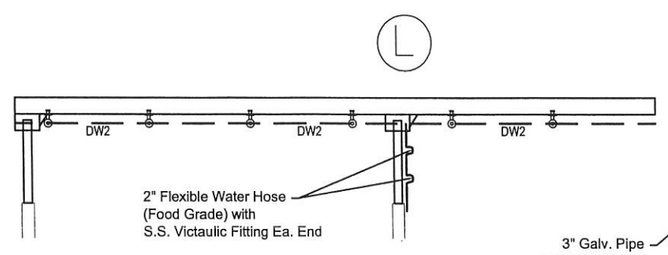

DW3	= 3" HDPE PIPE REDUCE TO 3/4" @ MAIN RUN TO FEED ALL HOSEBIBBS
DW2	= 2" HDPE PIPE REDUCE TO 3/4" @ MAIN RUN TO FEED ALL HOSEBIBBS
	= 3/4" HOSE BIBB (w/ Non-Removable Backflow Device)

DOMESTIC WATER PLAN

MAIN FEED AND ROUTING PLAN

ALL FEED LINES BETWEEN FLEX FITTING (DOWN GANGWAY) TO BE GALVANIZED

NO.	DATE	DESCRIPTION	BY
-	-	-	-

REVISIONS

Project Number: 06-3-442

PROJECT MANAGER _

Westpoint Marina
Redwood City, Ca.

Domestic Water Layout Dock F,G, H, L and M

Bellingham MARINE — Innovative harbor and waterfront solutions

UNIFLOAT — precision engineered dockfloat systems

This drawing contains proprietary information which is the property of Bellingham Marine Industries, Inc., and shall not be copied, reproduced or made available to third parties without prior written permission from Bellingham Marine Industries, Inc. UNIFLOAT®, UNIDECK® and UNISTACK® are registered trademarks of Bellingham Marine Industries, Inc. © Bellingham Marine Industries, Inc.

SCALE: As Noted
DRAWN BY: D. Hildebrandt
CHECKED BY: _
ENGINEER/DESIGNER: _ (-)
SHEET: 28 of 43
Drawing Number: DL3

City Of Redwood

ACCEPTED BY: _____ R.C.E. EXP. DATE
ACCEPTED BY: CITY ENGINEER R.C.E. EXP. DATE

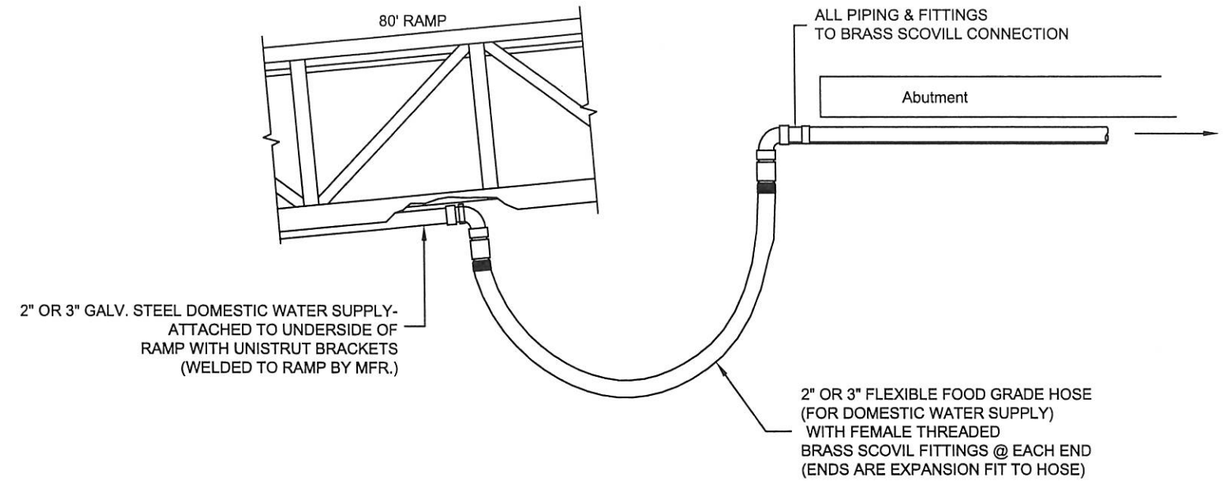

DOMESTIC WATER FLEX HOSE DETAIL @ TOP OF RAMP

NO SCALE

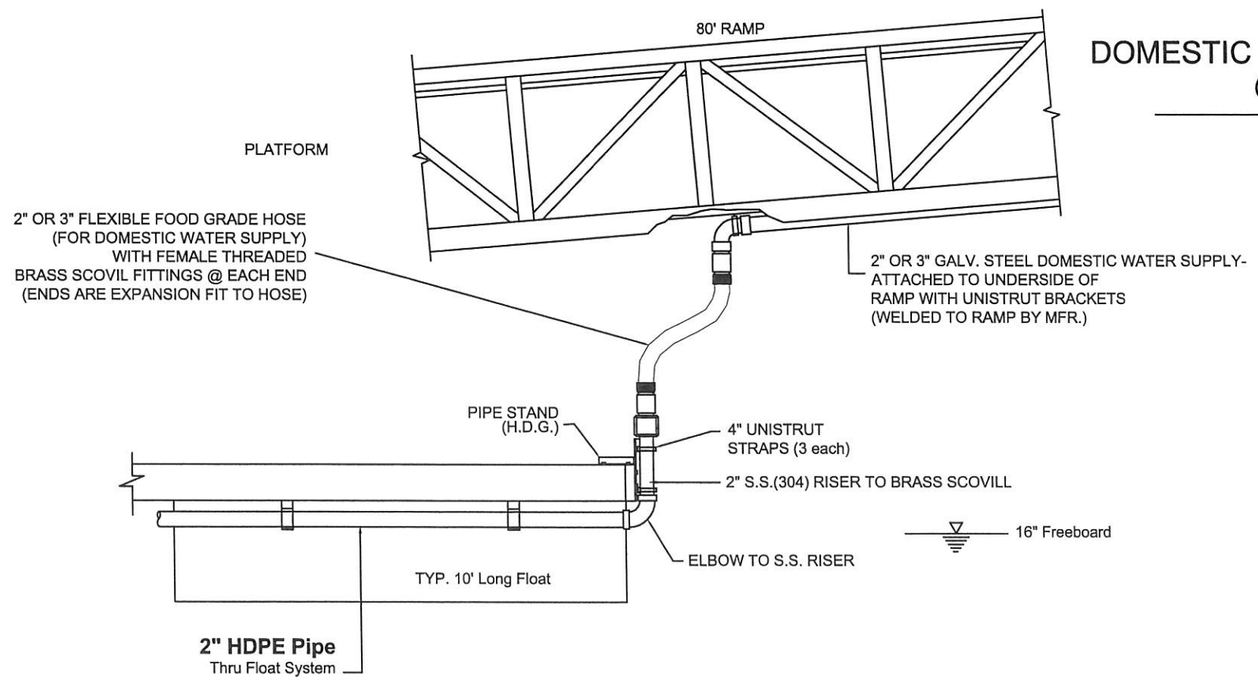

DOMESTIC WATER FLEX HOSE DETAIL Bottom of Ramp-to-Dock

NO SCALE

NO.	DATE	DESCRIPTION	BY
-	-	-	-

REVISIONS

Project Number: 06-3-442

PROJECT MANAGER _

Westpoint Marina
Redwood City, Ca.

Domestic Water Details

Bellingham MARINE — Innovative harbor and waterfront solutions
UNFLOAT.

This drawing contains proprietary information which is the property of Bellingham Marine Industries, Inc., and shall not be copied, reproduced or made available to third parties without prior written permission from Bellingham Marine Industries, Inc. UNIFLOAT®, UNIDECK® and UNISTACK® are registered trademarks of Bellingham Marine Industries, Inc. © Bellingham Marine Industries, Inc.

SCALE:	As Noted
DRAWN BY:	D. Hildebrandt
CHECKED BY:	_
ENGINEER/DESIGNER:	_ (-)
SHEET:	29 of 43
Drawing Number:	DL4

City Of Redwood

ACCEPTED BY: _____ R.C.E. EXP. DATE

ACCEPTED BY: CITY ENGINEER R.C.E. EXP. DATE

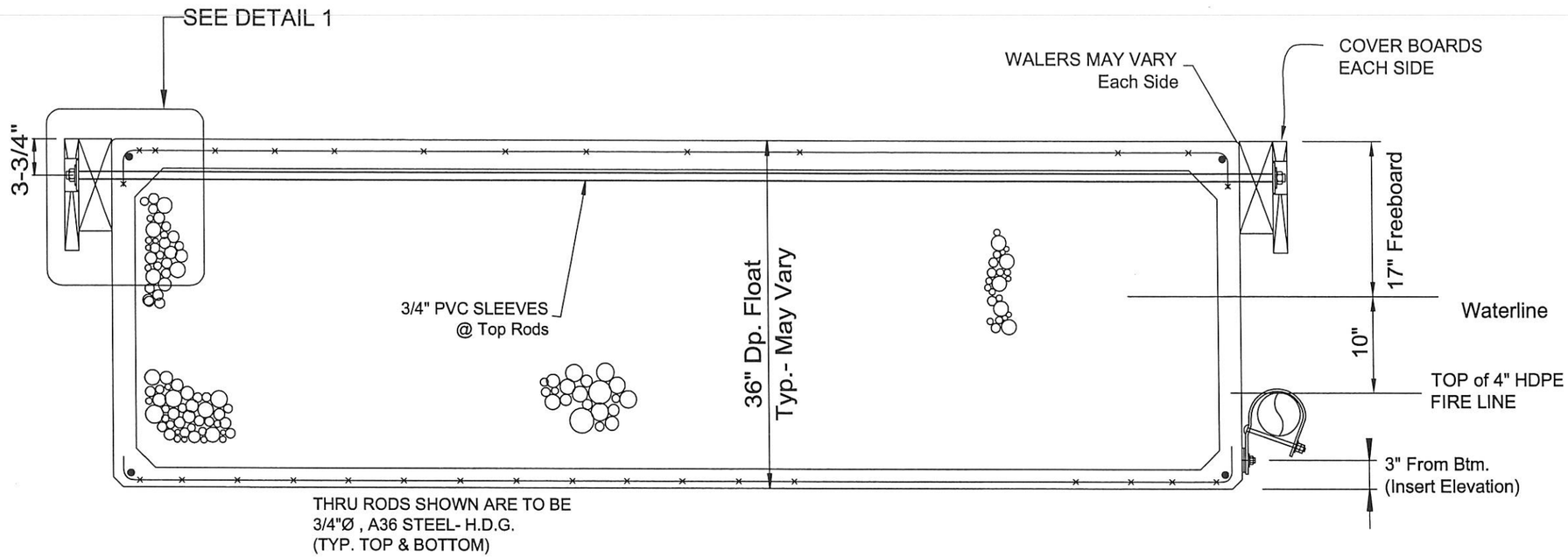

TYPICAL MAINWALK SECTION
with UTILITY PIPING HANGER
& ATTACHMENT DETAILS

NO.	DATE	DESCRIPTION	BY
1			
2			
3			
4			
5	-	-	-

REVISIONS

Project Number:
06-3-442

PROJECT MANAGER _

Westpoint Marina
Redwood City, Ca.

Domestic Water Details

Bellingham MARINE
Innovative harbor and waterfront solutions
UNIFLOAT.

This drawing contains proprietary information which is the property of Bellingham Marine Industries, Inc., and shall not be copied, reproduced or made available to third parties without prior written permission from Bellingham Marine Industries, Inc. UNIFLOAT®, UNIDECK® and UNISTACK® are registered trademarks of Bellingham Marine Industries, Inc. © Bellingham Marine Industries, Inc.

SCALE:	As Noted
DRAWN BY:	D. Hildebrandt
CHECKED BY:	_
ENGINEER/DESIGNER:	_ (-)
SHEET:	30 of 43
Drawing Number:	DL5

City Of Redwood

ACCEPTED BY: _____ R.C.E. EXP. DATE

ACCEPTED BY: _____ CITY ENGINEER R.C.E. EXP. DATE

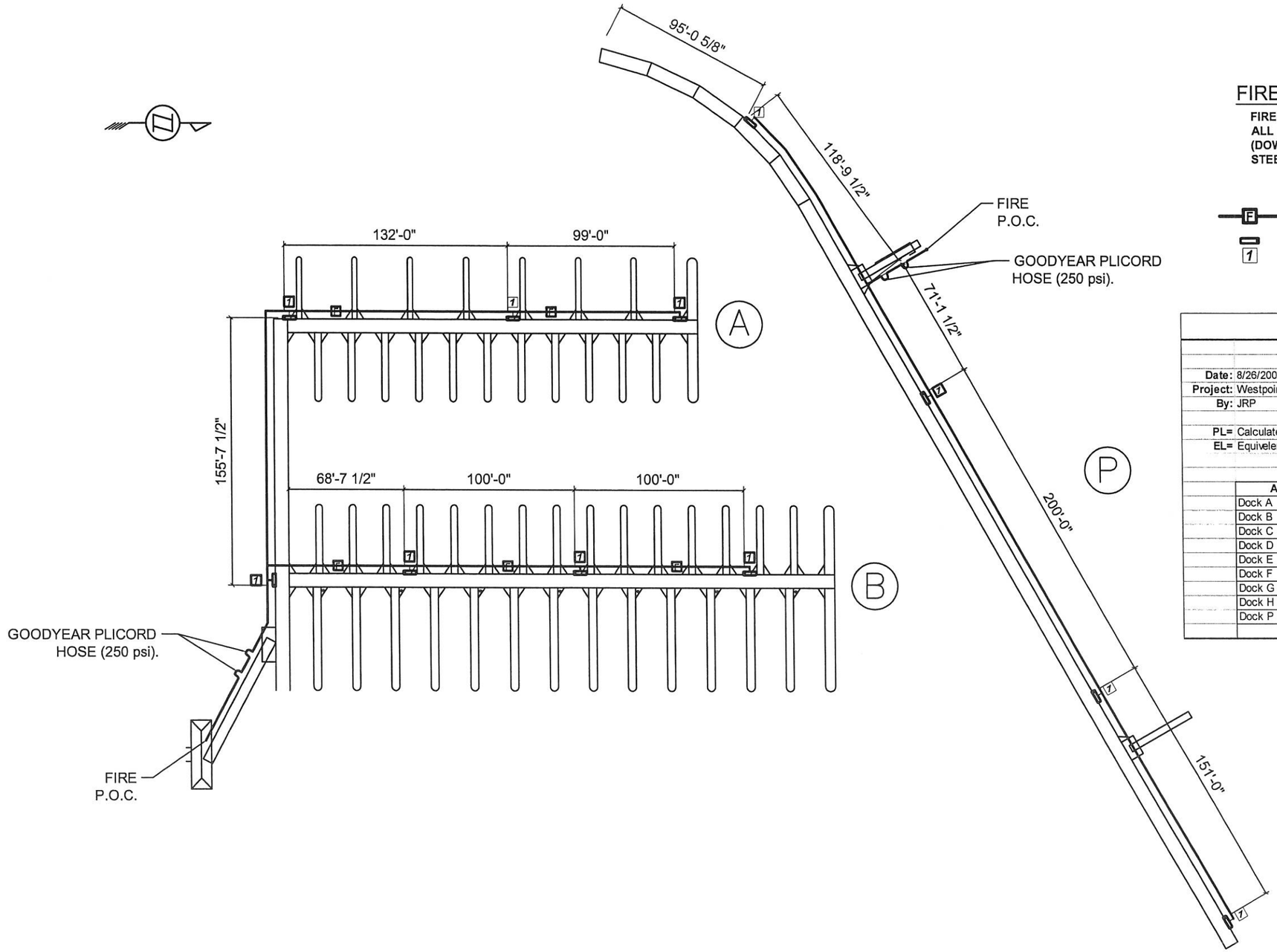

FIRE SUPRESSION SYSTEM

FIRE SYSTEM FEED AND ROUTING PLAN
ALL FEED LINES BETWEEN FLEX FITTING (DOWN GANGWAY) TO BE GALVANIZED STEEL PIPE

F = 4" FIRE MAIN LINE (HDPE)

1 = FIBERGLASS FIRE HOSE CABINET (FRP WHITE) with 100' HOSE and EXTINGUISHER

Fire System Flow Calculations

Date: 8/26/2006
Project: Westpoint Marina
By: JRP

PL= Calculated Length of Pipe, Including gangway, dock and risers
EL= Equivelent Length of pipe calculated for fittings

Area Description	PL	#90's	#T's	EL	Total PL
Dock A	390	7	3	130	520
Dock B	295	6	3	120	415
Dock C	739	7	7	210	949
Dock D	665	6	6	180	845
Dock E	762	7	6	190	952
Dock F	878	7	8	230	1108
Dock G	651	6	6	180	831
Dock H	617	7	5	170	787
Dock P	516	6	3	120	636
				0	0

NO.	DATE	DESCRIPTION	BY

REVISIONS

Project Number: 06-3-442

PROJECT MANAGER _

Westpoint Marina
Redwood City, Ca.

Fire System Layout A, B and P

Bellingham MARINE
Innovative harbor and waterfront solutions
UNIFLOAT.

This drawing contains proprietary information which is the property of Bellingham Marine Industries, Inc., and shall not be copied, reproduced or made available to third parties without prior written permission from Bellingham Marine Industries, Inc. UNIFLOAT®, UNIDECK® and UNISTACK® are registered trademarks of Bellingham Marine Industries, Inc. © Bellingham Marine Industries, Inc.

SCALE: As Noted
DRWN BY: D. Hildebrandt
CHECKED BY: _
ENGINEER/DESIGNER: _ (-)
SHEET: 31 of 43
Drawing Number: FL1

City Of Redwood

ACCEPTED BY: _ R.C.E. EXP. DATE
ACCEPTED BY: CITY ENGINEER R.C.E. EXP. DATE

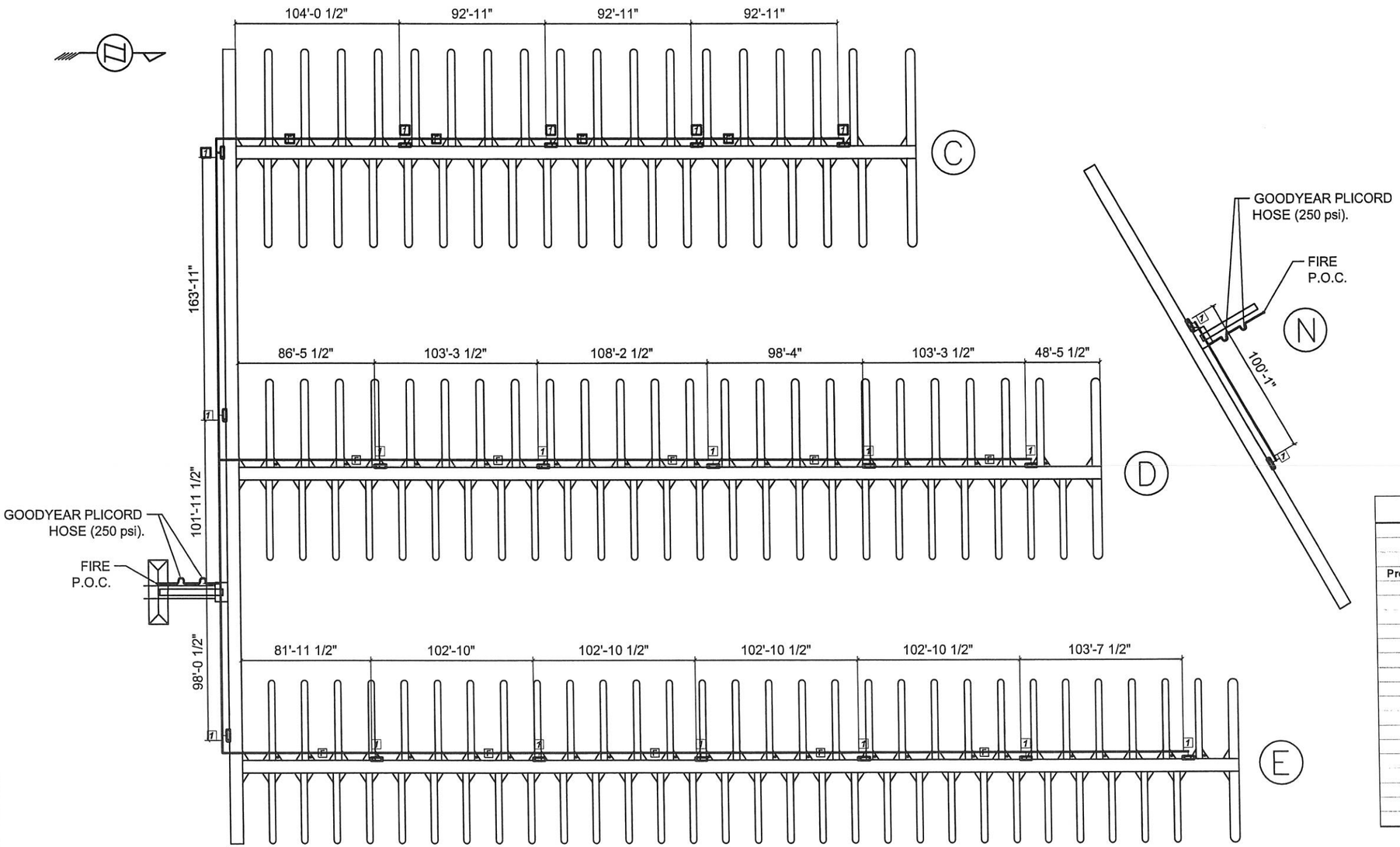

FIRE SUPRESSION SYSTEM

FIRE SYSTEM FEED AND ROUTING PLAN ALL FEED LINES BETWEEN FLEX FITTING (DOWN GANGWAY) TO BE GALVANIZED STEEL PIPE

F = 4" FIRE MAIN LINE (HDPE)

1 = FIBERGLASS FIRE HOSE CABINET (FRP WHITE) with 100' HOSE and EXTINGUISHER

Fire System Flow Calculations

Date: 8/26/2006
Project: Westpoint Marina
By: JRP

PL= Calculated Length of Pipe, Including gangway, dock and risers
EL= Equivelent Length of pipe calculated for fittings

Area Description	PL	#90's	#T's	EL	Total PL
Dock A	390	7	3	130	520
Dock B	295	6	3	120	415
Dock C	739	7	7	210	949
Dock D	665	6	6	180	845
Dock E	762	7	6	190	952
Dock F	878	7	8	230	1108
Dock G	651	6	6	180	831
Dock H	617	7	5	170	787
Dock P	516	6	3	120	636
				0	0

NO.	DATE	DESCRIPTION	BY
-	-		-

REVISIONS

Project Number: **06-3-442**

PROJECT MANAGER _

Westpoint Marina
Redwood City, Ca.

Fire System Layout C, D, E and N

Bellingham MARINE — innovative harbor and waterfront solutions
UNIFLOAT — precision engineered fabrication systems

This drawing contains proprietary information which is the property of Bellingham Marine Industries, Inc., and shall not be copied, reproduced or made available to third parties without prior written permission from Bellingham Marine Industries, Inc. UNIFLOAT®, UNIDECK® and UNISTACK® are registered trademarks of Bellingham Marine Industries, Inc. © Bellingham Marine Industries, Inc.

SCALE: As Noted
DRAWN BY: D. Hildebrandt
CHECKED BY: _
ENGINEER/DESIGNER: _ (-)
SHEET: 32 of 43
Drawing Number: FL2

City Of Redwood

ACCEPTED BY: _____ R.C.E. EXP. DATE
ACCEPTED BY: _____ CITY ENGINEER R.C.E. EXP. DATE

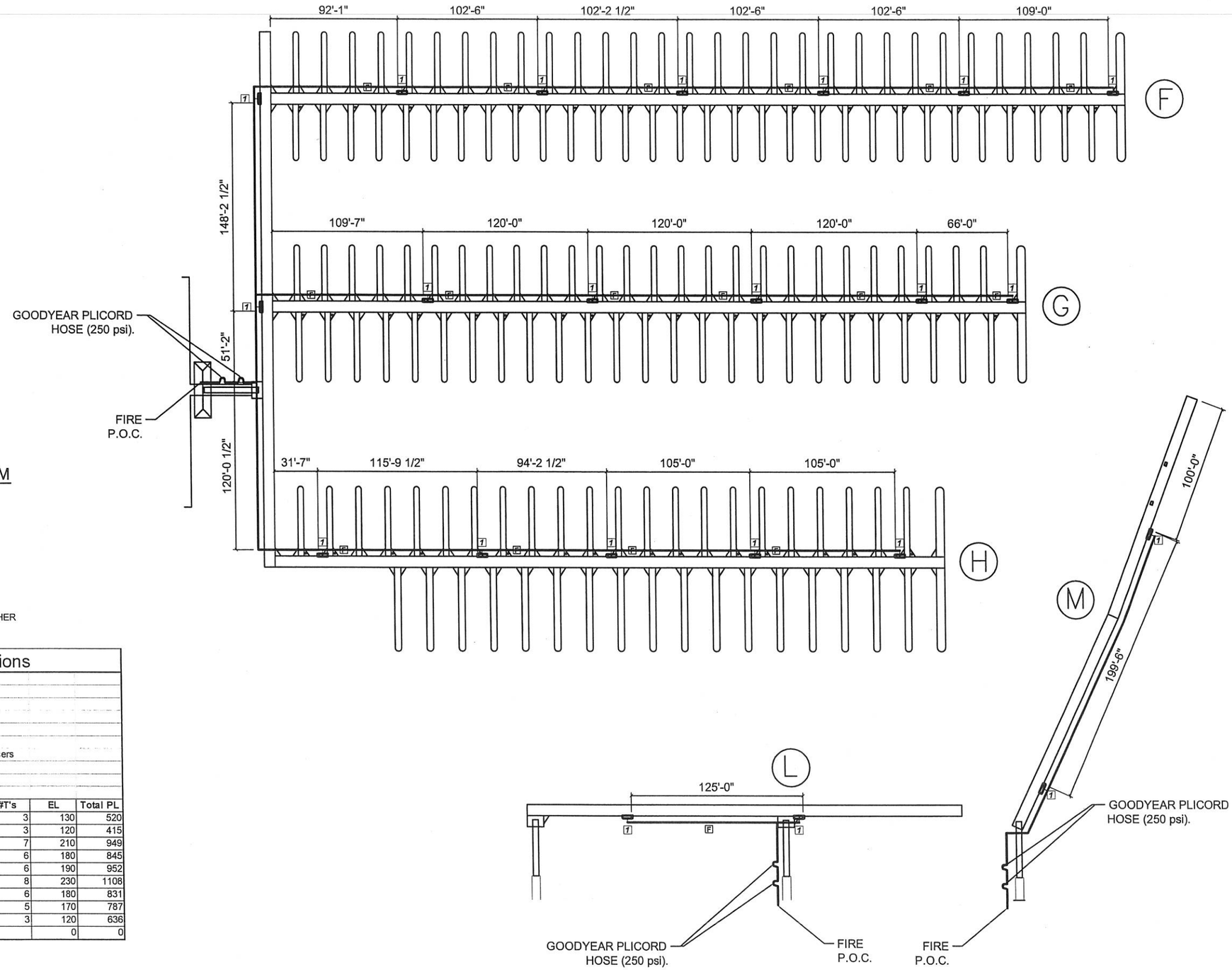

FIRE SUPRESSION SYSTEM

FIRE SYSTEM FEED AND ROUTING PLAN
ALL FEED LINES BETWEEN FLEX FITTING (DOWN GANGWAY) TO BE GALVANIZED STEEL PIPE

F = 4" FIRE MAIN LINE (HDPE)

= FIBERGLASS FIRE HOSE CABINET (FRP WHITE) with 100' HOSE and EXTINGUISHER

Fire System Flow Calculations

Date: 8/26/2006
Project: Westpoint Marina
By: JRP

PL= Calculated Length of Pipe, Including gangway, dock and risers
EL= Equivelent Length of pipe calculated for fittings

Area Description	PL	#90's	#T's	EL	Total PL
Dock A	390	7	3	130	520
Dock B	295	6	3	120	415
Dock C	739	7	7	210	949
Dock D	665	6	6	180	845
Dock E	762	7	6	190	952
Dock F	878	7	8	230	1108
Dock G	651	6	6	180	831
Dock H	617	7	5	170	787
Dock P	516	6	3	120	636
				0	0

NO.	DATE	DESCRIPTION	BY
-	-		-

REVISIONS

Project Number: 06-3-442

PROJECT MANAGER _

Westpoint Marina
Redwood City, Ca.

Fire System Layout F, G, H, L and M

Bellingham MARINE. UNIFLOAT.
Innovative harbor and waterfront solutions

This drawing contains proprietary information which is the property of Bellingham Marine Industries, Inc., and shall not be copied, reproduced or made available to third parties without prior written permission from Bellingham Marine Industries, Inc. UNIFLOAT®, UNIDECK® and UNISTACK® are registered trademarks of Bellingham Marine Industries, Inc. © Bellingham Marine Industries, Inc.

SCALE: As Noted
DRAWN BY: D. Hildebrandt
CHECKED BY: _
ENGINEER/DESIGNER: _ (-)
SHEET: 33 of 43
Drawing Number: FL3

City Of Redwood

ACCEPTED BY: _ R.C.E. EXP. DATE
ACCEPTED BY: _ CITY ENGINEER R.C.E. EXP. DATE

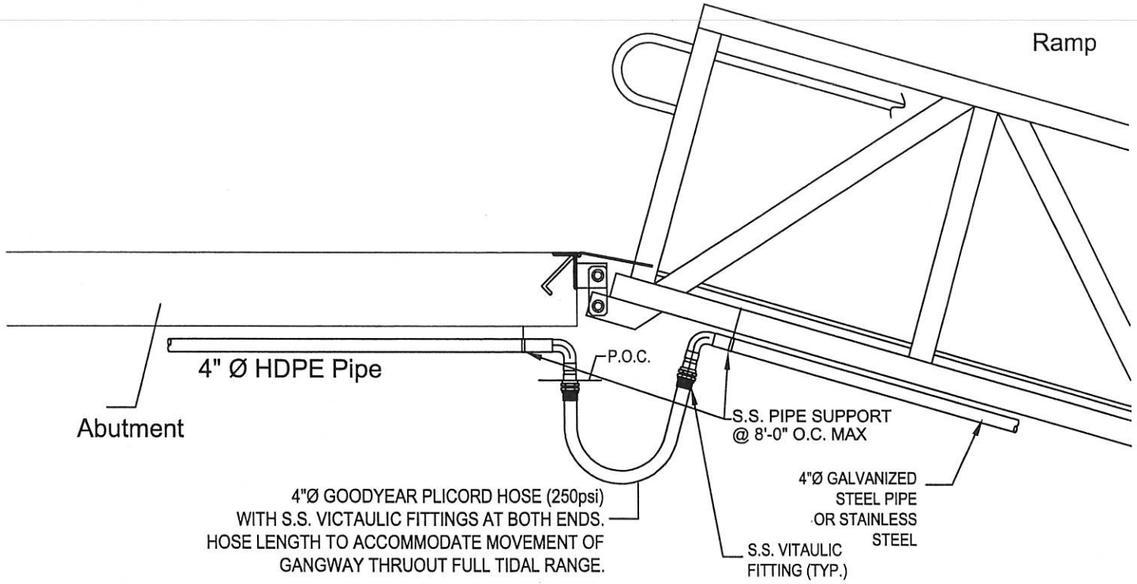

Detail @ Ramp-To-Land Fire Line Connections

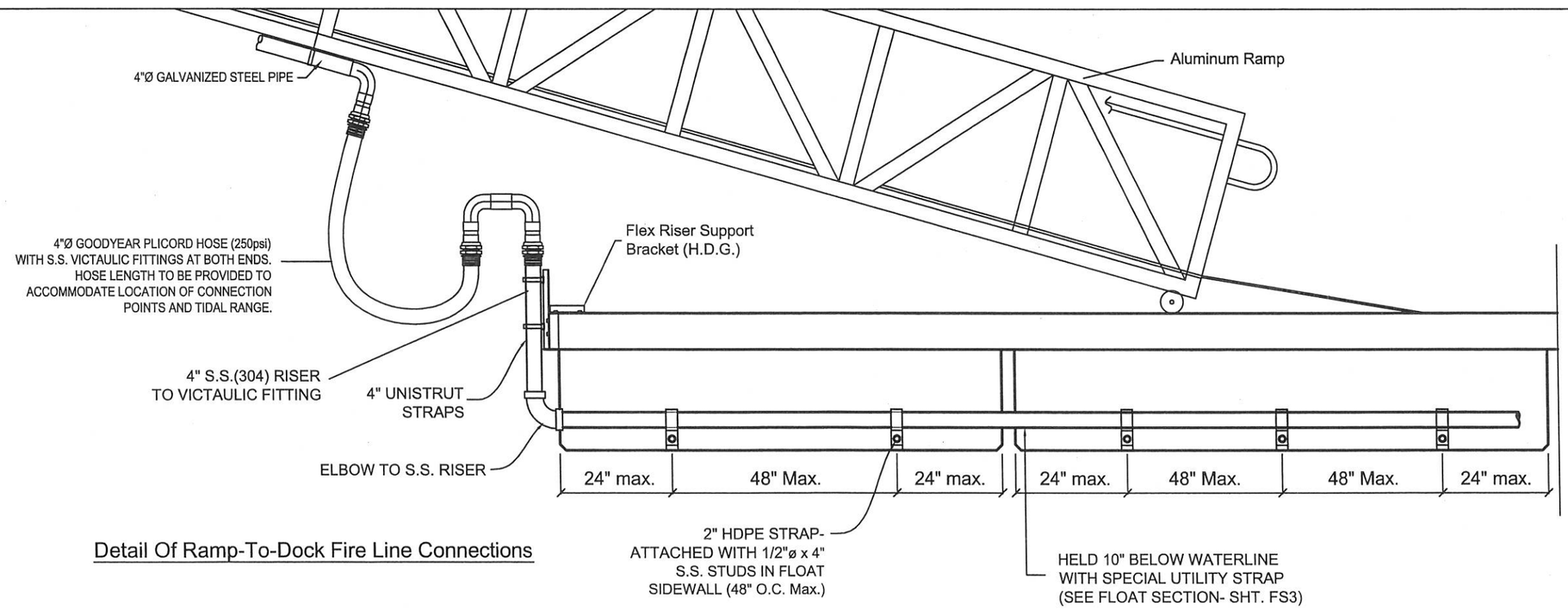

Detail Of Ramp-To-Dock Fire Line Connections

NO.	DATE	DESCRIPTION	BY
1			
2			
3			
4			
5	-	-	-

REVISIONS

Project Number: **06-3-442**

PROJECT MANAGER _

Westpoint Marina
Redwood City, Ca.

Fire System Details

Bellingham MARINE. UNIFLOAT.
Innovative harbor and waterfront solutions

This drawing contains proprietary information which is the property of Bellingham Marine Industries, Inc., and shall not be copied, reproduced or made available to third parties without prior written permission from Bellingham Marine Industries, Inc. UNIFLOAT®, UNIDECK® and UNISTACK® are registered trademarks of Bellingham Marine Industries, Inc. © Bellingham Marine Industries, Inc.

SCALE:	As Noted
DRAWN BY:	D. Hildebrandt
CHECKED BY:	_
ENGINEER/DESIGNER:	_ (-)
SHEET:	34 of 43
Drawing Number:	FL4

City Of Redwood

ACCEPTED BY: _____ R.C.E. EXP. DATE

ACCEPTED BY: _____ CITY ENGINEER R.C.E. EXP. DATE

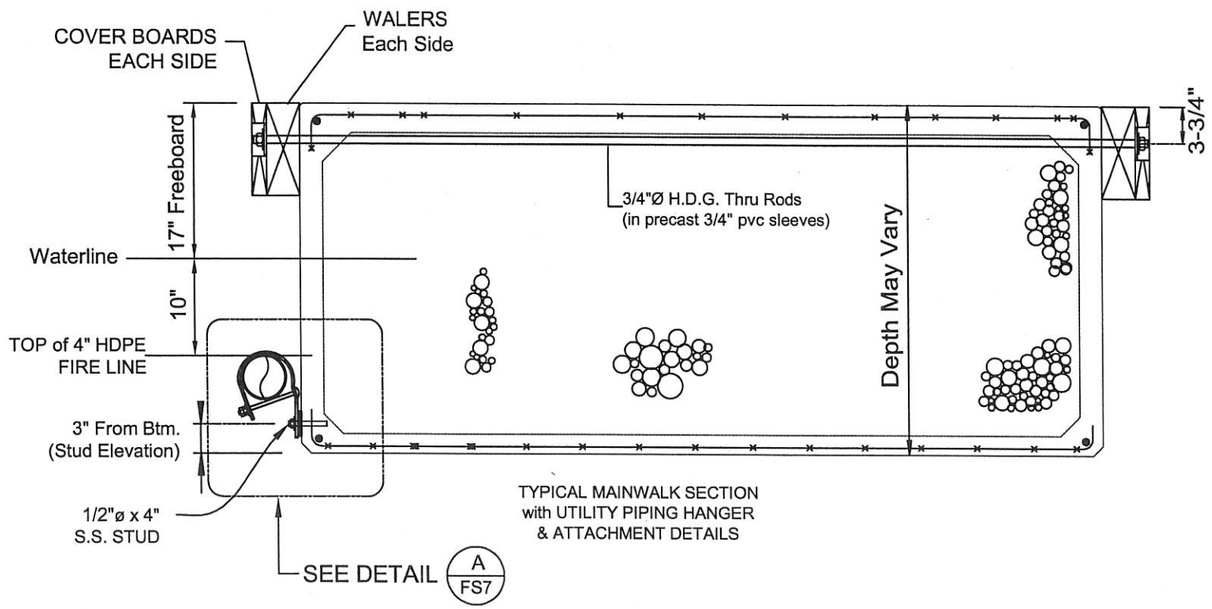

TYPICAL MAINWALK SECTION
with UTILITY PIPING HANGER
& ATTACHMENT DETAILS

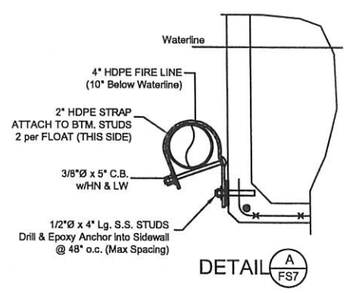

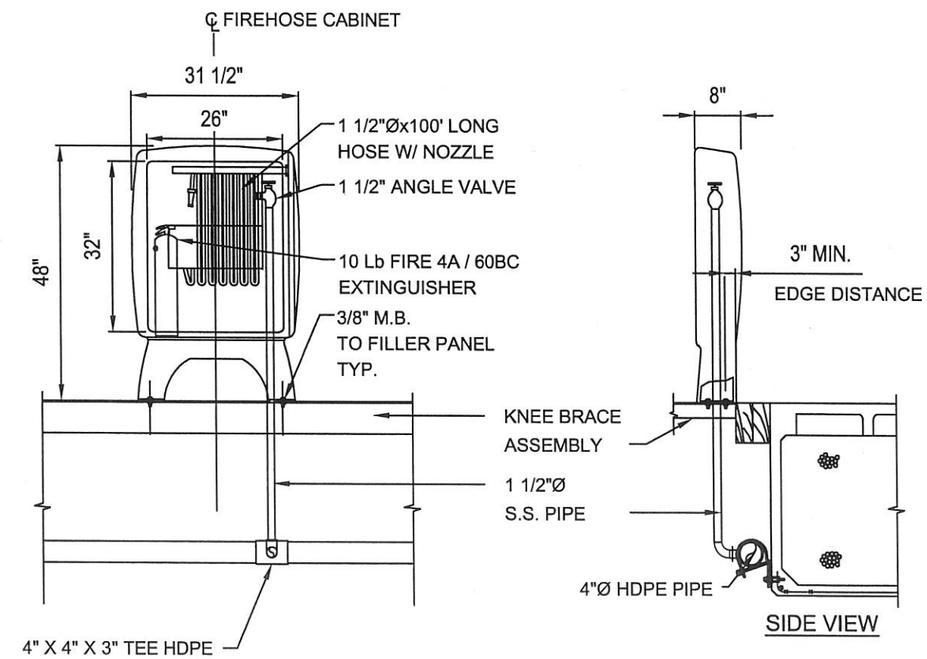

FIRE HOSE CABINET ELEVATION/DETAIL

NO.	DATE	DESCRIPTION	BY
1			
2			
3			
4			
5	-	-	-

REVISIONS

Project Number: 06-3-442

PROJECT MANAGER _

Westpoint Marina
Redwood City, Ca.

Fire System Details

Bellingham MARINE — Innovative harbor and waterfront solutions
UNIFLOAT — precision engineered floatation systems

This drawing contains proprietary information which is the property of Bellingham Marine Industries, Inc., and shall not be copied, reproduced or made available to third parties without prior written permission from Bellingham Marine Industries, Inc. UNIFLOAT®, UNIDECK® and UNISTACK® are registered trademarks of Bellingham Marine Industries, Inc. © Bellingham Marine Industries, Inc.

SCALE:	As Noted
DRAWN BY:	D. Hildebrandt
CHECKED BY:	_
ENGINEER/DESIGNER:	— (-)
SHEET	35 of 43
Drawing Number:	FL5

City Of Redwood

ACCEPTED BY: _____ R.C.E. EXP. DATE
ACCEPTED BY: _____ CITY ENGINEER R.C.E. EXP. DATE

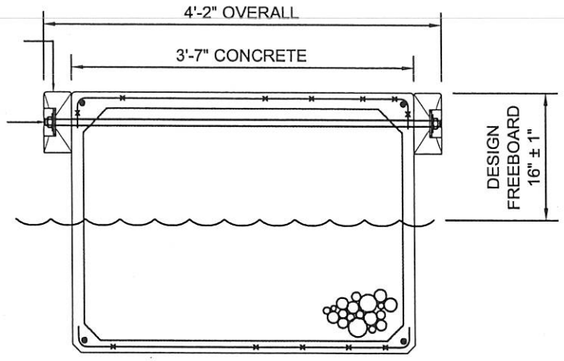

TYP. 4' WIDE FINGER SECTION

(1' Wave Design)
Scale: 1/4" = 1'-0"

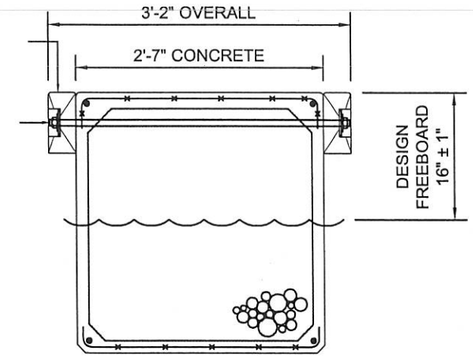

TYP. 3' WIDE FINGER SECTION

(1' Wave Design)
Scale: 1/4" = 1'-0"

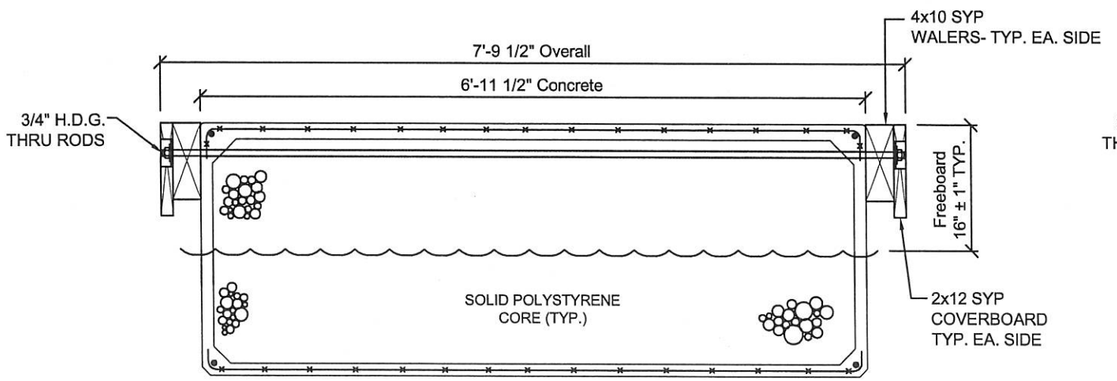

TYP. 8' WIDE MAIN/ MARGINAL WALK SECTION

(1' Wave Design)
Scale: 1/4" = 1'-0"

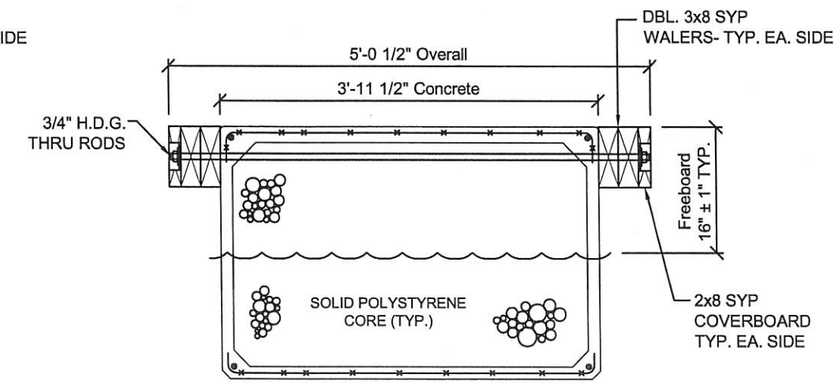

TYP. 5' WIDE FINGER SECTION

(1' Wave Design)
Scale: 1/4" = 1'-0"

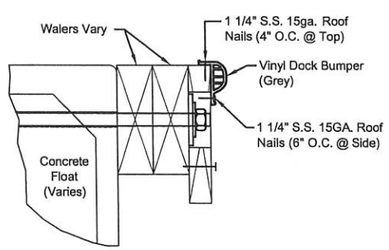

TYP. BUMPER DETAIL @ ALL FING., MAINWALK AND END TIES

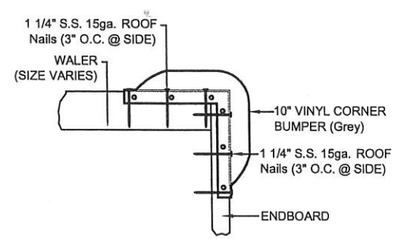

TYP. CORNER BUMPER DETAIL @ ALL DOCK CORNERS

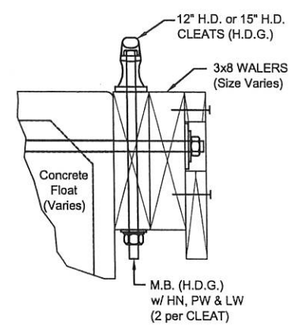

TYP. CLEAT SECTION

NOTES:

1. CLEATS ARE TO BE INSTALLED AS CLOSE AS POSSIBLE TO CENTER OF WALERS.
2. CLEATS MUST NOT STRADDLE THRU RODS.
3. CLEATS AT TRIANGLE FRAMES SHALL BE AS CLOSE AS CONDITIONS PERMIT TO ANGLE POINT.
4. MIDPOINT CLEATS SHOULD BE CENTERED AS CONDITIONS PERMIT; AVOID LOCATING CLEATS AT FLOAT JOINTS.
5. ALL CLEATS ARE TO BE GAVANIZED
6. VINYL DOCK BUMPER TO BE PREMIER #RR-5005 (GREY)- TO BE INSTALLED CONTINUOUS IN SLIPS ONLY DURING FIELD ASSEMBLY/INSTALLATION (NOT TO BE DONE DURING SUBASSEMBLY BY BMI).
7. ALL CORNER BUMPERS ARE TO BE 10" STANDARD GREY VINYL.

NO.	DATE	DESCRIPTION	BY
△			
△			
△			
△			
△	-	-	-

REVISIONS

Project Number: **06-3-442**

PROJECT MANAGER _

Westpoint Marina
Redwood City, Ca.

TYP. Assembly Details

Bellingham MARINE — Innovative harbor and waterfront solutions
UNIFLOAT — resilient engineered floatation systems

This drawing contains proprietary information which is the property of Bellingham Marine Industries, Inc., and shall not be copied, reproduced or made available to third parties without prior written permission from Bellingham Marine Industries, Inc. UNIFLOAT®, UNIDECK® and UNISTACK® are registered trademarks of Bellingham Marine Industries, Inc. © Bellingham Marine Industries, Inc.

SCALE:	As Noted
DRAWN BY:	D. Hildebrandt
CHECKED BY:	–
ENGINEER/DESIGNER:	– (-)
SHEET:	36 of 43
Drawing Number:	A1

City Of Redwood

ACCEPTED BY: _____ R.C.E. EXP. DATE
ACCEPTED BY: _____ CITY ENGINEER R.C.E. EXP. DATE

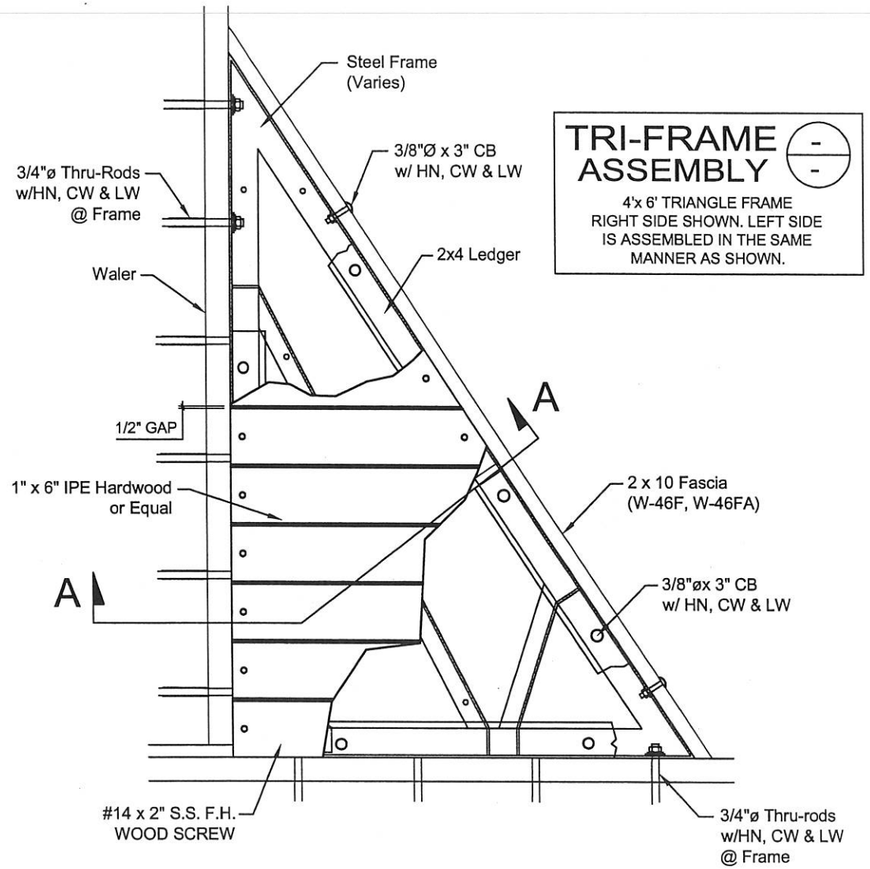

TRI-FRAME ASSEMBLY

4'x 6' TRIANGLE FRAME
RIGHT SIDE SHOWN. LEFT SIDE
IS ASSEMBLED IN THE SAME
MANNER AS SHOWN.

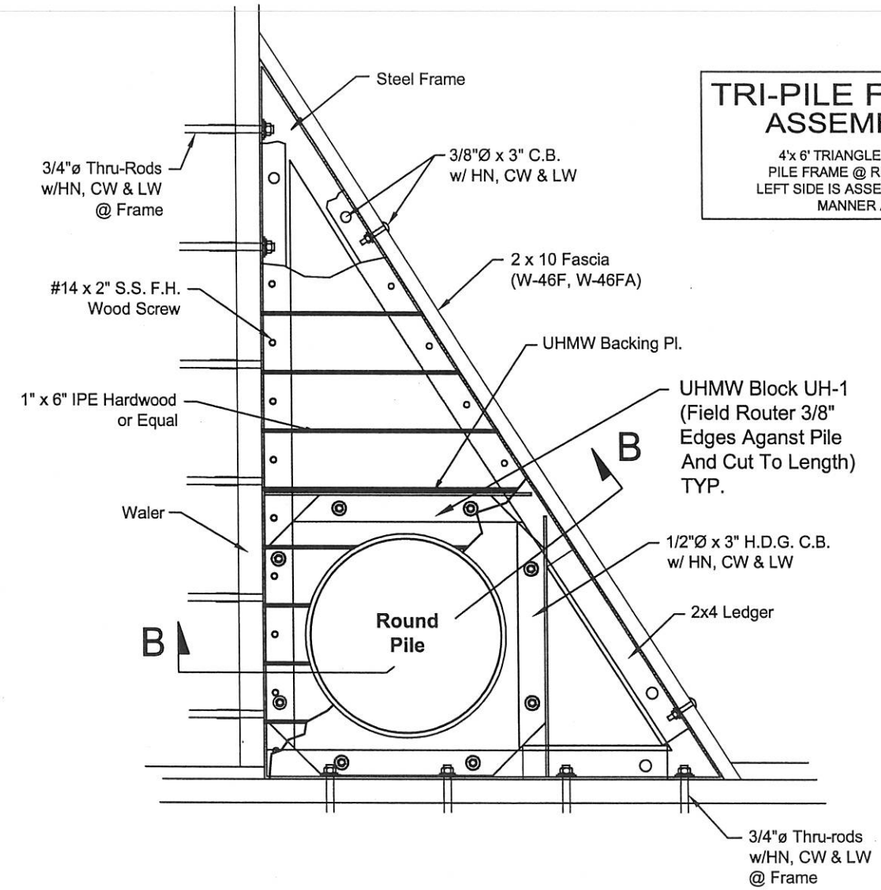

TRI-PILE FRAME ASSEMBLY

4'x 6' TRIANGLE ASSEMBLY WITH
PILE FRAME @ RIGHT SIDE SHOWN.
LEFT SIDE IS ASSEMBLED IN THE SAME
MANNER AS SHOWN.

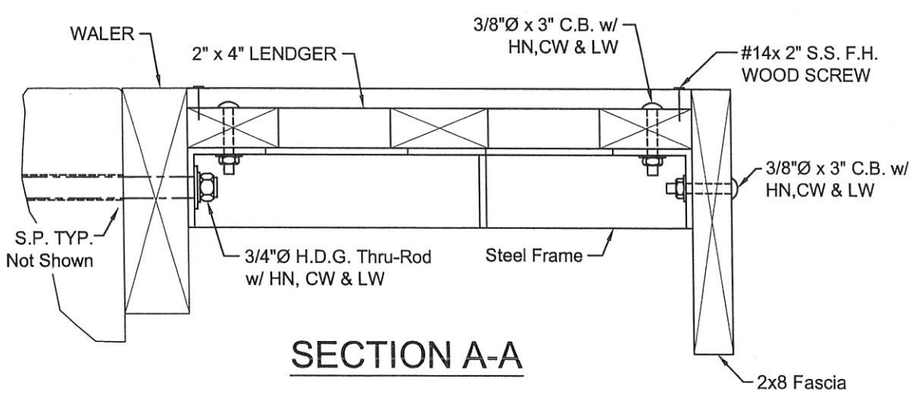

SECTION A-A

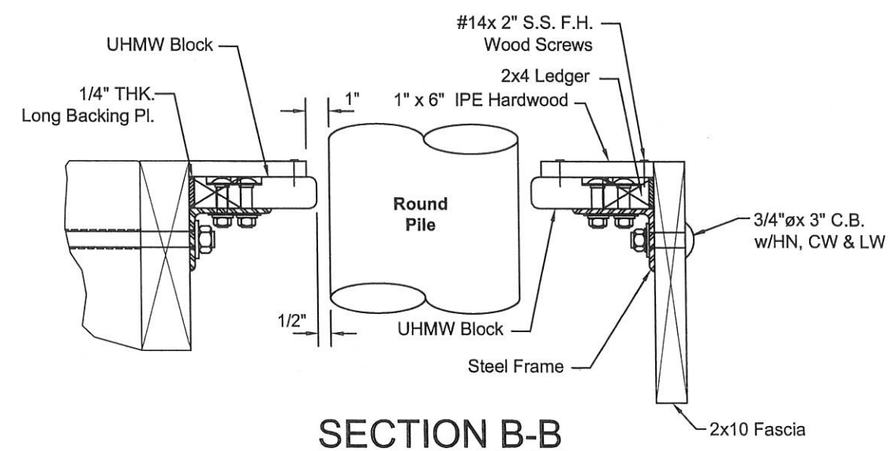

SECTION B-B

NO.	DATE	DESCRIPTION	BY
△			
△			
△			
△			
△	-	-	-

REVISIONS

Project Number:
06-3-442

PROJECT MANAGER _

Westpoint Marina
Redwood City, Ca.

TYP. Assembly Details

Bellingham MARINE
innovative harbor and waterfront solutions
UNIFLOAT.

This drawing contains proprietary information which is the property of Bellingham Marine Industries, Inc., and shall not be copied, reproduced or made available to third parties without prior written permission from Bellingham Marine Industries, Inc. UNIFLOAT®, UNIDECK® and UNISTACK® are registered trademarks of Bellingham Marine Industries, Inc. © Bellingham Marine Industries, Inc.

SCALE:	As Noted
DRAWN BY:	D. Hildebrandt
CHECKED BY:	_
ENGINEER/DESIGNER:	_ (-)
SHEET:	37 of 43
Drawing Number:	A2

City Of Redwood

ACCEPTED BY: _____ R.C.E. EXP. DATE
ACCEPTED BY: _____ CITY ENGINEER R.C.E. EXP. DATE

TYP. SIDE PILE GUIDE ASSEMBLY

TYP. SIDE PILE GUIDE ASSEMBLY DETAIL

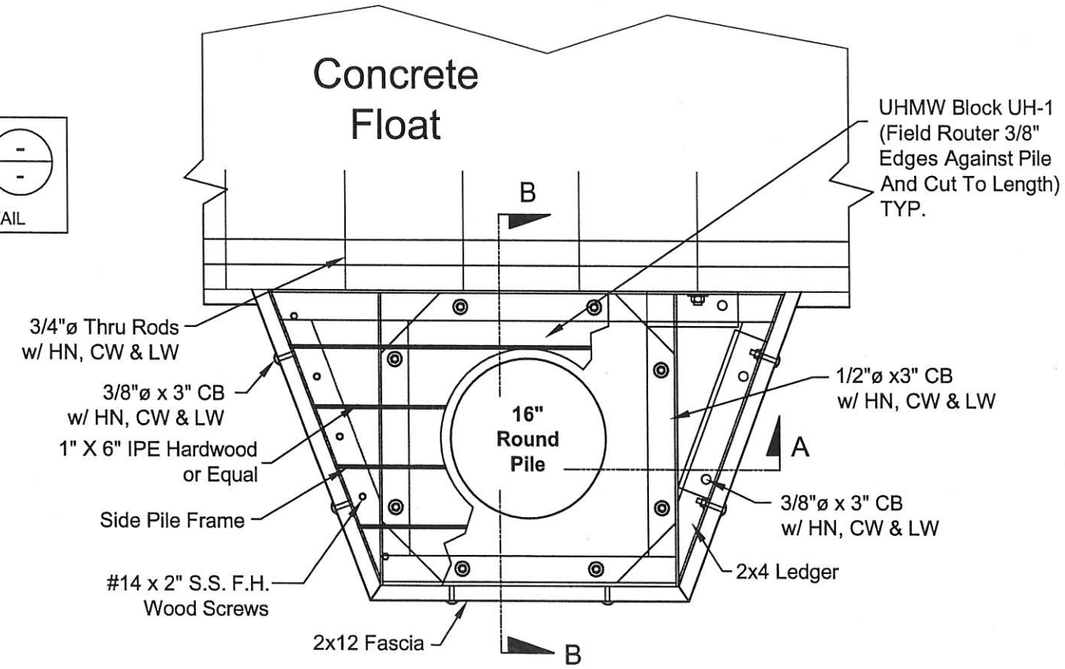

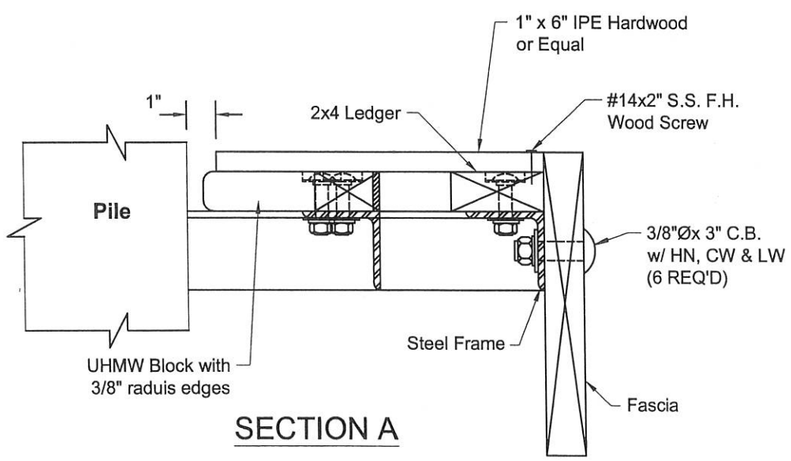

SECTION A

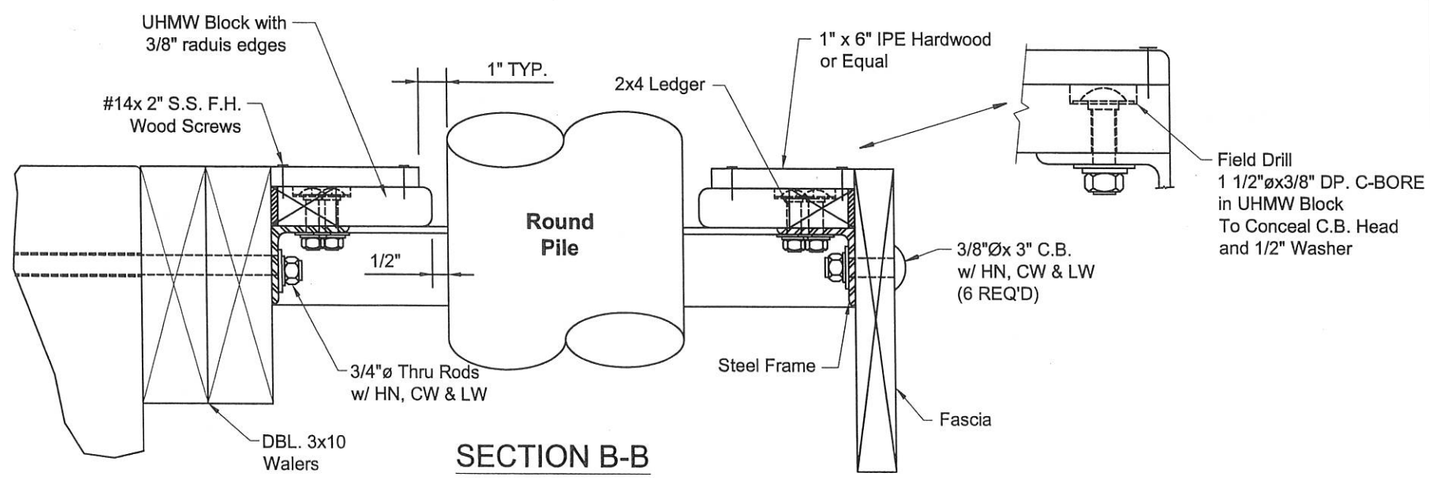

SECTION B-B

NO.	DATE	DESCRIPTION	BY
1			
2			
3			
4			
5	-	-	-

REVISIONS

Project Number: 06-3-442

PROJECT MANAGER _

Westpoint Marina
Redwood City, Ca.

TYP. Assembly Details

Bellingham MARINE — Innovative harbor and waterfront solutions. UNFLOAT.

This drawing contains proprietary information which is the property of Bellingham Marine Industries, Inc., and shall not be copied, reproduced or made available to third parties without prior written permission from Bellingham Marine Industries, Inc. UNIFLOATR, UNIDECKR and UNISTACKR are registered trademarks of Bellingham Marine Industries, Inc. © Bellingham Marine Industries, Inc.

SCALE:	As Noted
DRAWN BY:	D. Hildebrandt
CHECKED BY:	_
ENGINEER/DESIGNER:	-- (-)
SHEET:	38 of 43
Drawing Number:	A3

City Of Redwood

ACCEPTED BY: _____ R.C.E. EXP. DATE

ACCEPTED BY: _____ CITY ENGINEER R.C.E. EXP. DATE

Notes:

1. All End Tie Fingers To Have 15" H.D. Cleats.
2. Cleat Spacing At End Ties to Match Adjacent Finger of the Same Length

CLEAT SIZES AND LOCATIONS

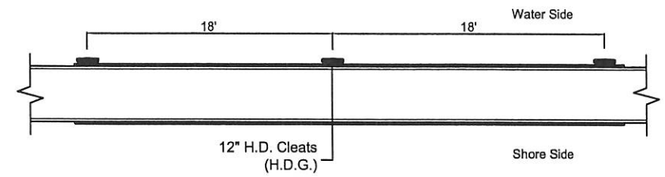

Typ. @ Side Ties

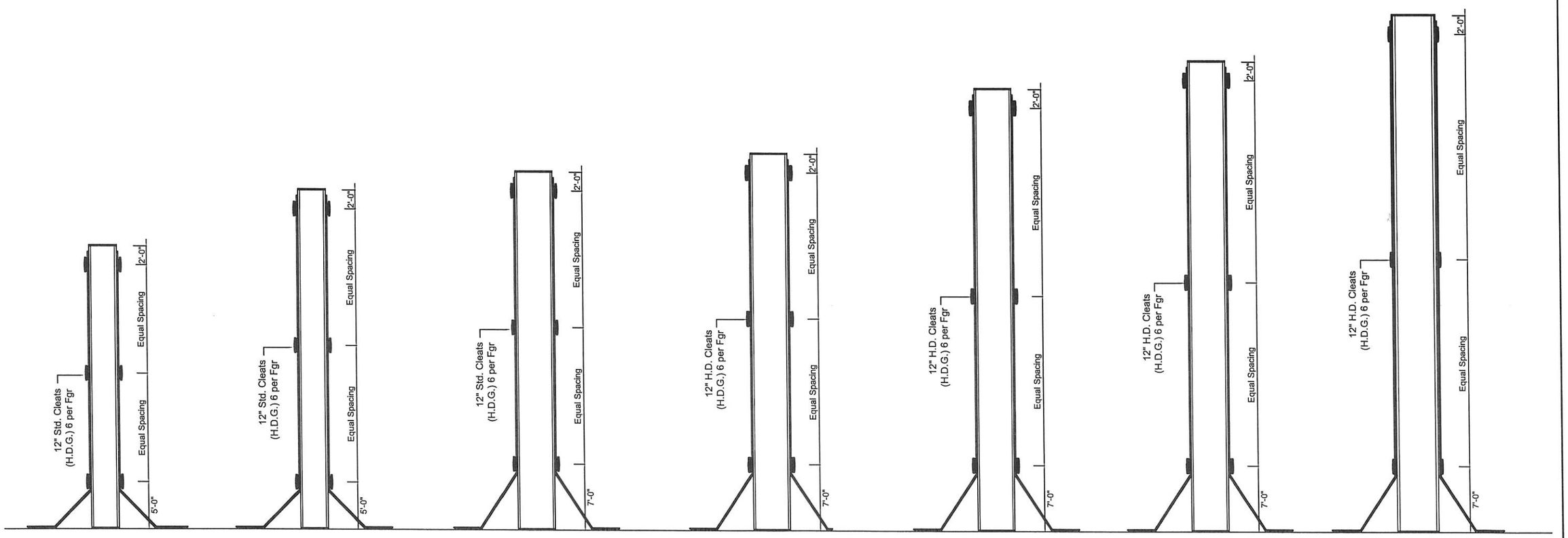

Typ. 30' Finger | Typ. 36' Finger | Typ. 38' Finger | Typ. 40' Finger | Typ. 47' Finger | Typ. 50' Finger | Typ. 55' Finger

NO.	DATE	DESCRIPTION	BY
-	-		-

REVISIONS

Project Number: 06-3-442

PROJECT MANAGER _

Westpoint Marina
Redwood City, Ca.

TYP. Assembly Details

Bellingham MARINE. UNIFLOAT.
Innovative harbor and waterfront solutions

This drawing contains proprietary information which is the property of Bellingham Marine Industries, Inc., and shall not be copied, reproduced or made available to third parties without prior written permission from Bellingham Marine Industries, Inc. UNIFLOAT®, UNIDECK® and UNISTACK® are registered trademarks of Bellingham Marine Industries, Inc. © Bellingham Marine Industries, Inc.

SCALE: As Noted
DRAWN BY: D. Hildebrandt
CHECKED BY: _
ENGINEER/DESIGNER: _ (-)
SHEET: 39 of 43
Drawing Number: A4

City Of Redwood

ACCEPTED BY: _ R.C.E. EXP. DATE
ACCEPTED BY: CITY ENGINEER R.C.E. EXP. DATE

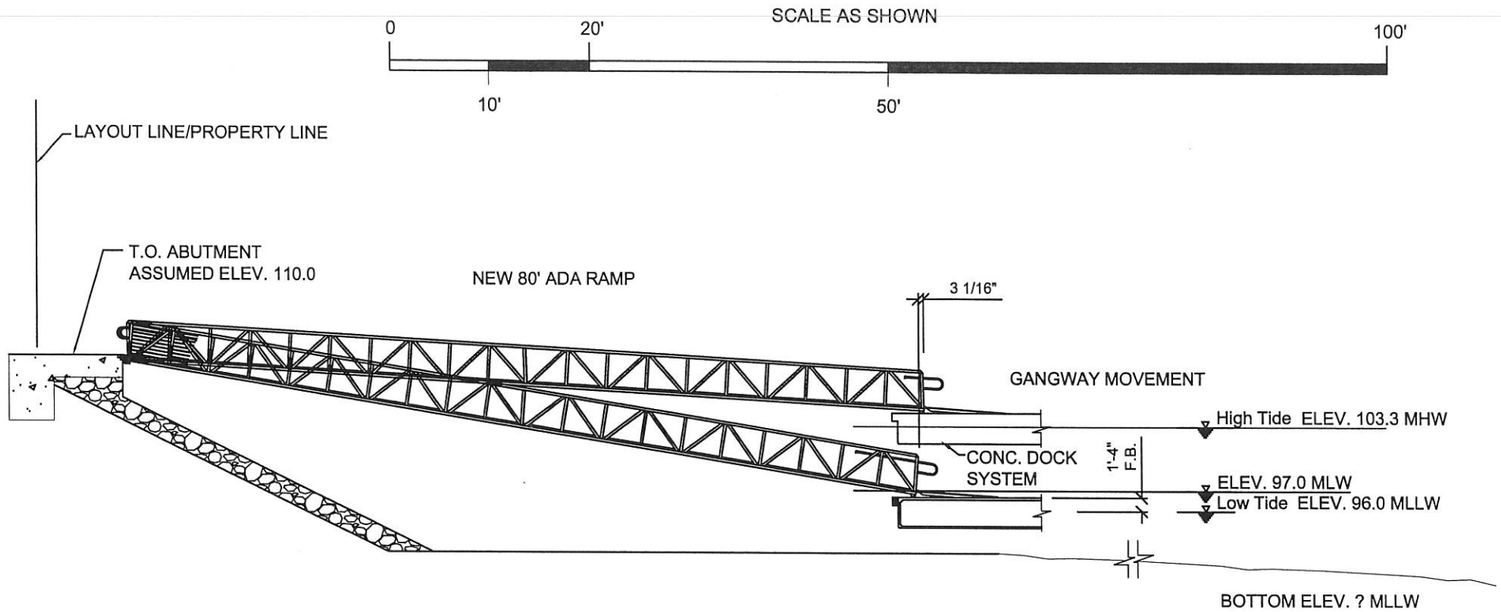

GANGWAY ELEVATION

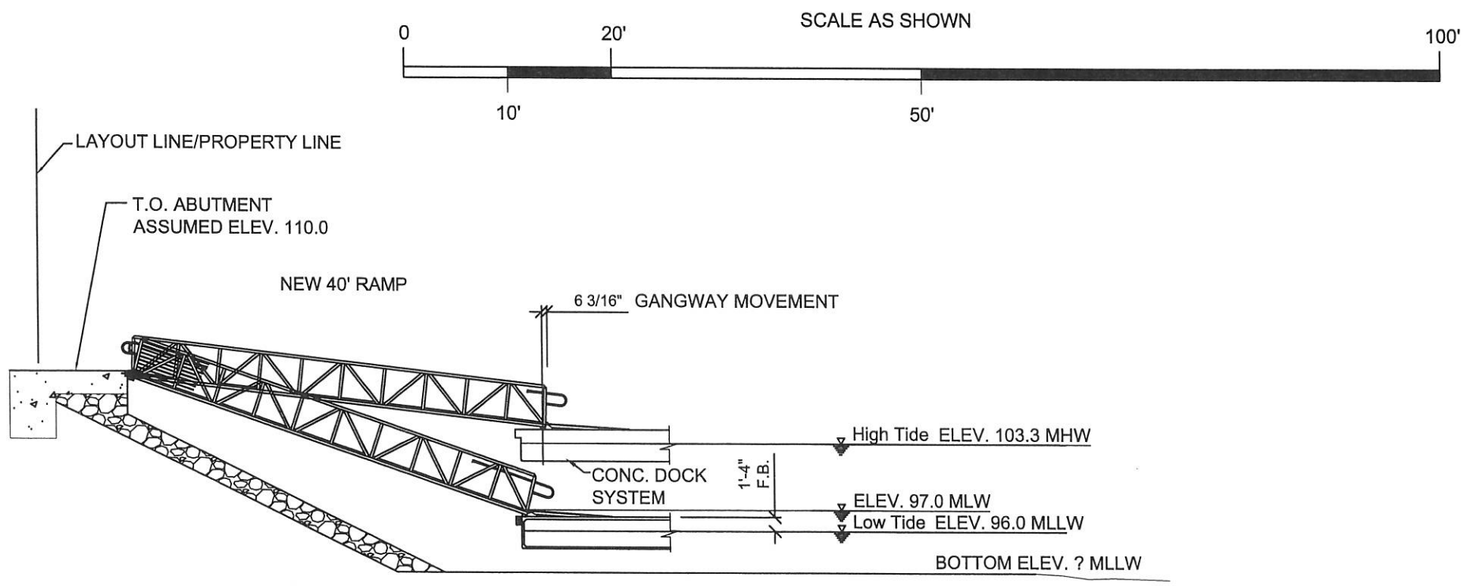

GANGWAY ELEVATION

NO.	DATE	DESCRIPTION	BY
1			
2			
3			
4			
5	-	-	-

REVISIONS

Project Number: 06-3-442

PROJECT MANAGER _

Westpoint Marina
Redwood City, Ca.

Gangway Elevations

Bellingham MARINE
Innovative harbor and waterfront solutions
UNIFLOAT. precision engineered floation systems

This drawing contains proprietary information which is the property of Bellingham Marine Industries, Inc., and shall not be copied, reproduced or made available to third parties without prior written permission from Bellingham Marine Industries, Inc. UNIFLOAT®, UNIDECK® and UNISTACK® are registered trademarks of Bellingham Marine Industries, Inc. © Bellingham Marine Industries, Inc.

SCALE:	As Noted
DRAWN BY:	D. Hildebrandt
CHECKED BY:	_
ENGINEER/DESIGNER:	— (-)
SHEET:	40 of 43
Drawing Number:	GE1

City Of Redwood

ACCEPTED BY: _____ R.C.E. EXP. DATE

ACCEPTED BY: _____ CITY ENGINEER R.C.E. EXP. DATE

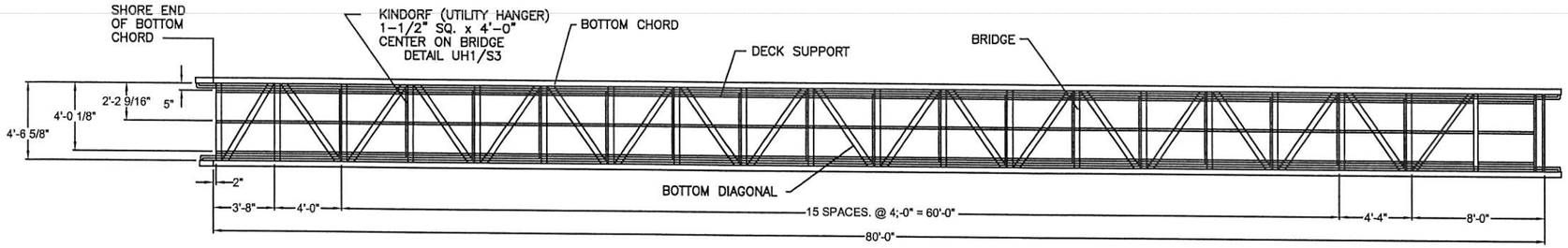

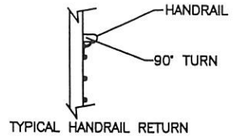

TYPICAL HANDRAIL RETURN

NOTE:
HANDRAIL AND MIDRAIL TO RUN PARALLEL WITH INCLINE DECKING

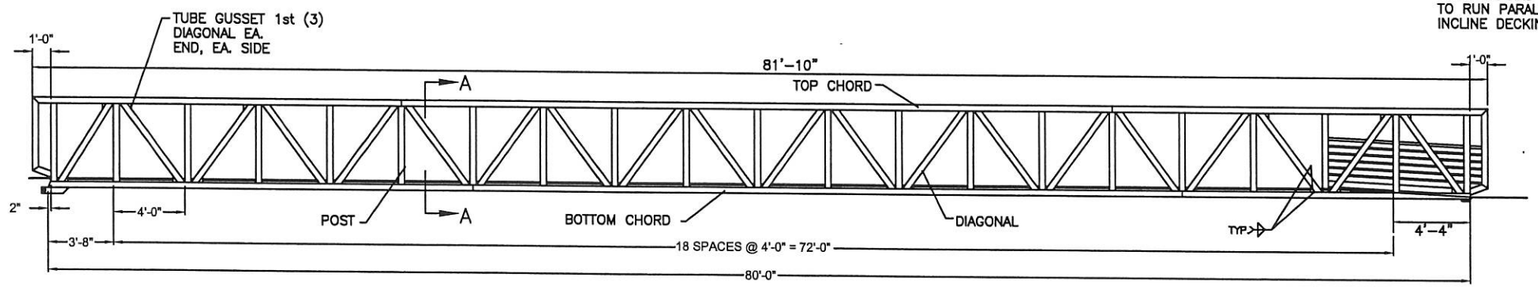

ELEVATION VIEW

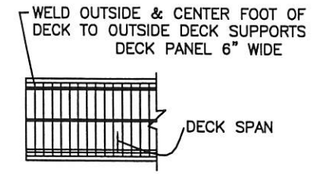

TYP. DIAPHRAGM WELDING DETAIL FOR ALUMINUM DECK

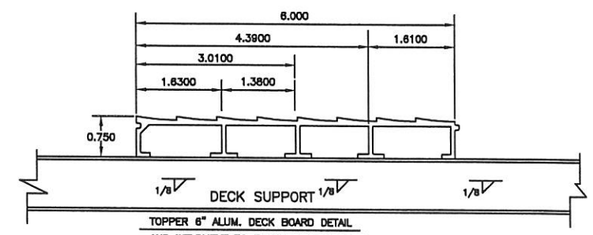

TOPPER 6" ALUM. DECK BOARD DETAIL
AND WELDMENT TO EACH DECK SUPPORT
SCALE = NONE

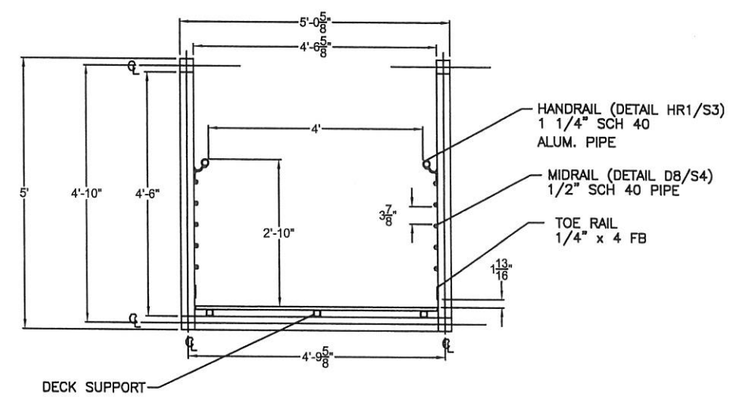

VIEW 'A-A'

GENERAL STRUCTURAL NOTES

CODE REQUIREMENTS:

CONFORMS TO THE UNIFORM BUILDING CODE, 1997 EDITION.

TEMPORARY CONDITIONS:

THE CONTRACTOR SHALL BE RESPONSIBLE FOR STRUCTURAL STABILITY DURING CONSTRUCTION. THE STRUCTURE SHOWN ON THE DRAWINGS HAS BEEN DESIGNED FOR STABILITY IN THE FINAL CONFIGURATION ONLY.

DESIGN LOADS:

IN ADDITION TO THE DEAD LOADS, THE FOLLOWING LOADS AND ALLOWABLES WERE USED FOR THE DESIGN :

WIND	70 MPH EXPOSURE D
EARTHQUAKE (SEISMIC ZONE)	ZONE 4

STRUCTURAL MATERIAL:

ALL SHAPES TO BE ALUMINUM 6061-T6

FABRICATION SHALL BE IN ACCORDANCE WITH THE AA SPECIFICATIONS FOR ALUMINUM STRUCTURES. WELDING SHALL CONFORM TO THE AWS CODES FOR ALUMINUM. WELDS SHALL BE MADE USING FILLER ALLOY 5356.

PREQUALIFIED WELDING PROCEDURES SHALL CONFORM TO ANSI/AWS D1.2-90

ISOLATOR MEMBRANE/SHIM SHALL BE PROVIDED AT STEEL/ALUMINUM INTERFACE.

UHMW INDICATES ULTRA HIGH MOLECULAR WEIGHT POLYETHYLENE

GANGWAY NOTES:

GANGWAY LIVE LOAD	50 PSF
DEFLECTION	L/360

1. DECK TYPE 3/4" ALUMINUM NON-SKID

TUBE SIZES

A.	TOP AND BOTTOM CORD	4 x 4 x .250
B.	VERTICAL POSTS	4 x 4 x .125
C.	SIDE DIAGONALS	4 x 4 x .125
D.	BRIDGE	4 x 4 x .125
E	BOTTOM DIAGONAL	4 x 4 x .125
F.	DECK SUPPORT	1 1/2 x 1 1/2 x .125

NO.	DATE	DESCRIPTION	BY
1	-	-	-

REVISIONS

Project Number: 06-3-442

PROJECT MANAGER _

Westpoint Marina
Redwood City, Ca.

Gangway Fabrication Details

Bellingham MARINE — Innovative harbor and waterfront solutions
UNIFLOAT — floatation engineered timber systems

This drawing contains proprietary information which is the property of Bellingham Marine Industries, Inc., and shall not be copied, reproduced or made available to third parties without prior written permission from Bellingham Marine Industries, Inc. UNIFLOAT®, UNIDECK® and UNISTACK® are registered trademarks of Bellingham Marine Industries, Inc. © Bellingham Marine Industries, Inc.

SCALE:	As Noted
DRAWN BY:	D. Hildebrandt
CHECKED BY:	_
ENGINEER/DESIGNER:	_ (-)
SHEET:	41 of 43
Drawing Number:	GD1

City Of Redwood

ACCEPTED BY: _____ R.C.E. EXP. DATE
ACCEPTED BY: _____ CITY ENGINEER R.C.E. EXP. DATE

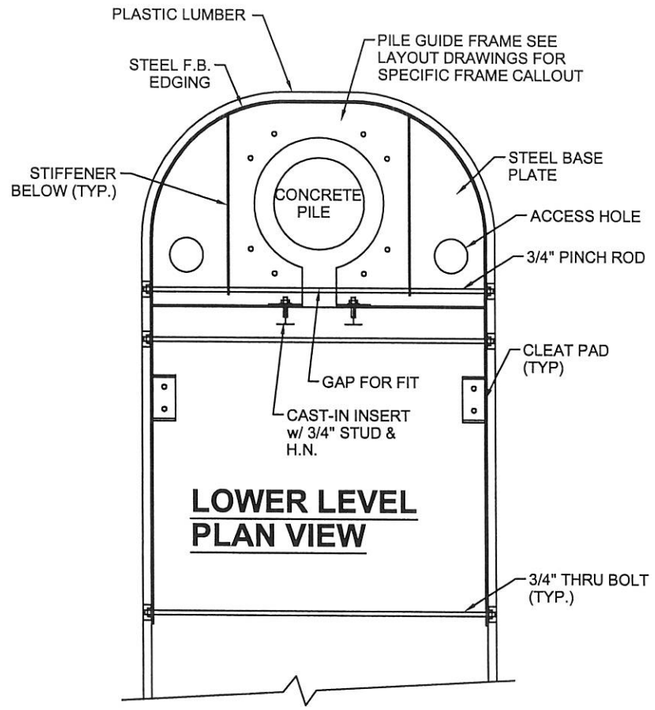

LOWER LEVEL PLAN VIEW

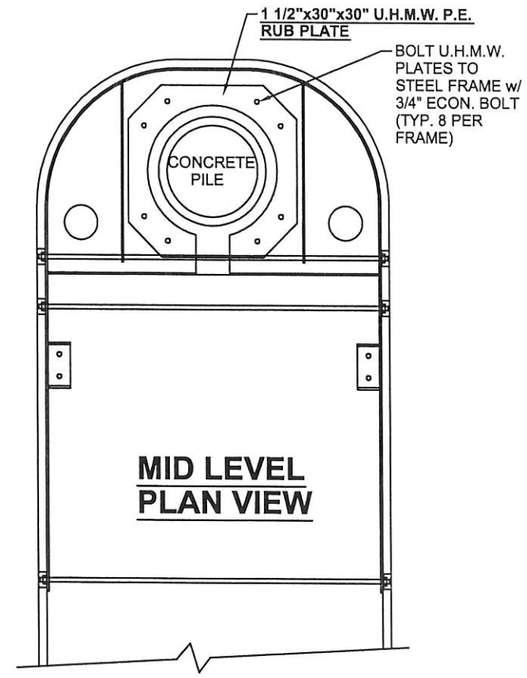

MID LEVEL PLAN VIEW

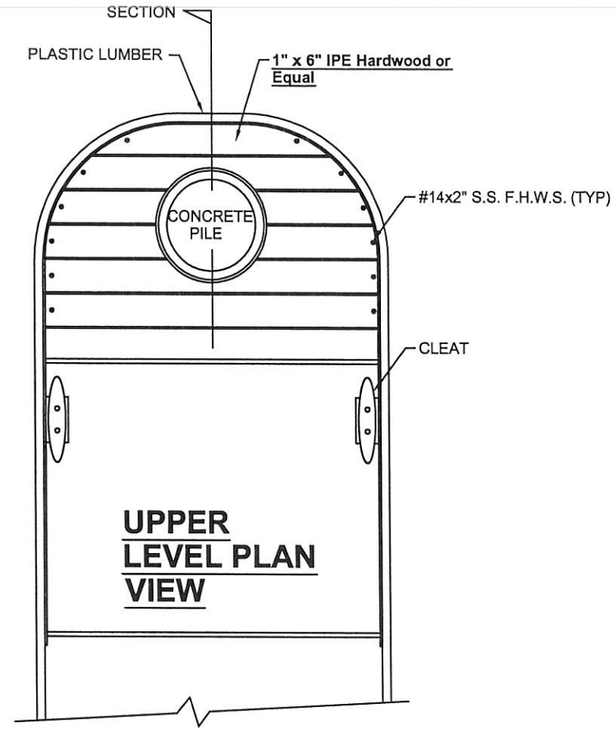

UPPER LEVEL PLAN VIEW

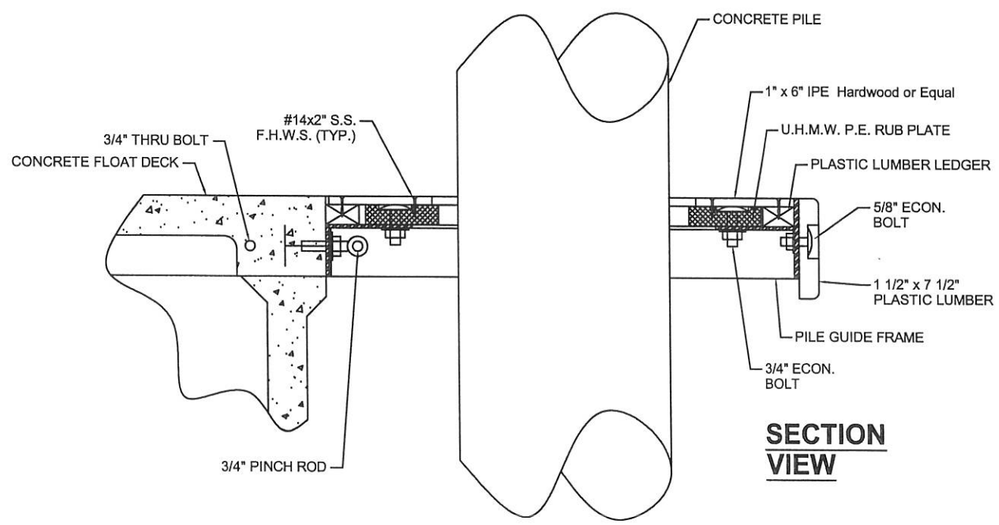

SECTION VIEW

SECTION VIEW

NO.	DATE	DESCRIPTION	BY
-	-		-

REVISIONS

Project Number: **06-3-442**

PROJECT MANAGER _

Westpoint Marina
Redwood City, Ca.

TYP.End Gates Details

Bellingham MARINE — Innovative harbor and waterfront solutions
UNIFLOAT. precast engineered floatation systems

This drawing contains proprietary information which is the property of Bellingham Marine Industries, Inc., and shall not be copied, reproduced or made available to third parties without prior written permission from Bellingham Marine Industries, Inc. UNIFLOAT®, UNIEDGE® and UNISTACK® are registered trademarks of Bellingham Marine Industries, Inc. © Bellingham Marine Industries, Inc.

SCALE:	As Noted
DRAWN BY:	D. Hildebrandt
CHECKED BY:	_
ENGINEER/DESIGNER:	— (-)
SHEET:	42 of 43
Drawing Number:	EG1

City Of Redwood

ACCEPTED BY: _____ R.C.E. EXP. DATE
ACCEPTED BY: _____ CITY ENGINEER R.C.E. EXP. DATE

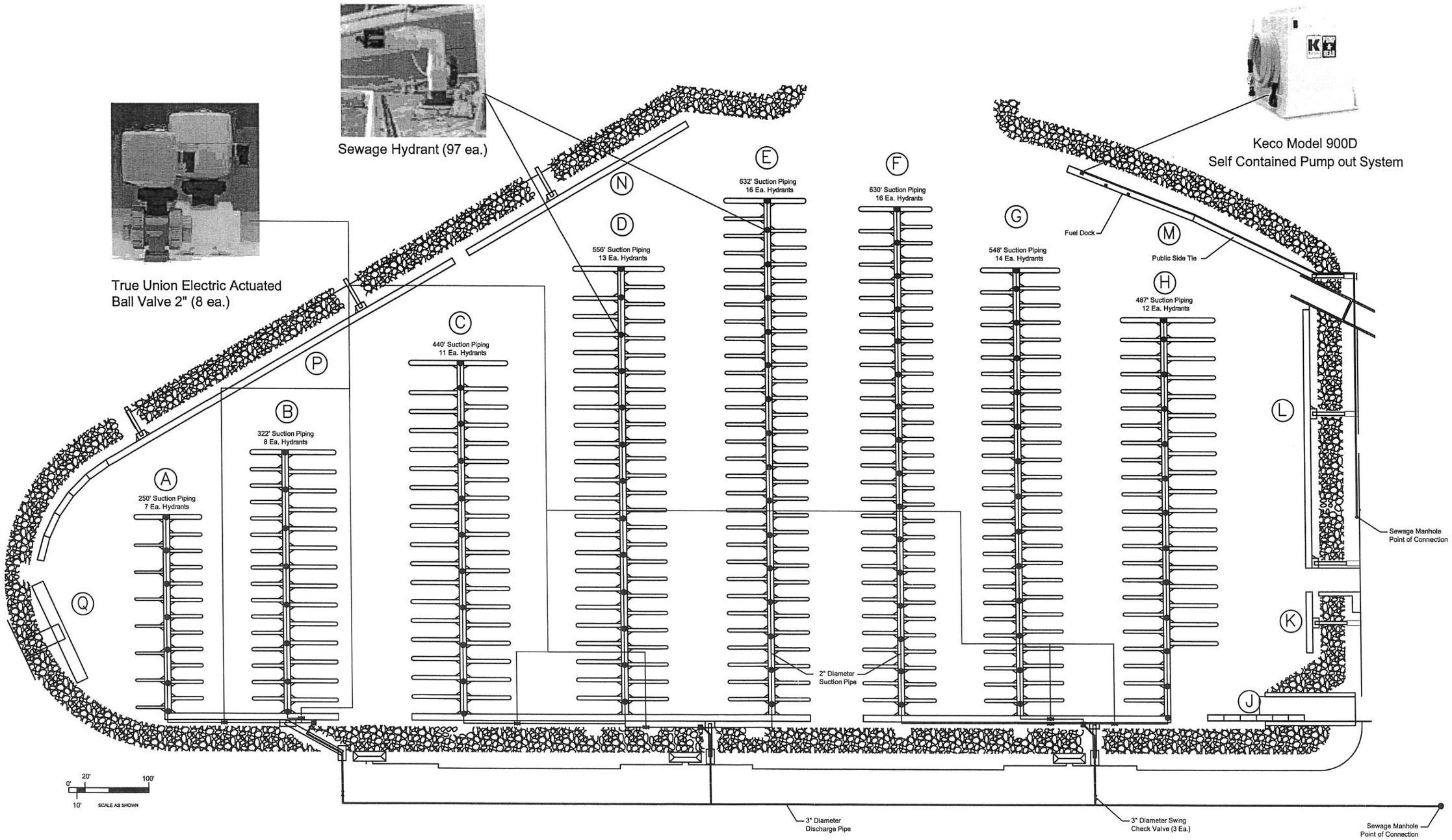

NO.	DATE	DESCRIPTION	BY
1			
2			
3			
4			
5	-	-	-

REVISIONS

Project Number:

06-3-442

PROJECT MANAGER _

Westpoint Marina

Redwood City, Ca.

Sewage Pump-Out System

Bellingham MARINE — Innovative harbor and waterfront solutions

UNIFLOAT — precision engineered floatation systems

This drawing contains proprietary information which is the property of Bellingham Marine Industries, Inc., and shall not be copied, reproduced or made available to third parties without prior written permission from Bellingham Marine Industries, Inc. UNIFLOAT®, UNIDECK® and UNISTACK® are registered trademarks of Bellingham Marine Industries, Inc. © Bellingham Marine Industries, Inc.

SCALE:	As Noted
DRAWN BY:	D. Hildebrandt
CHECKED BY:	_
ENGINEER/DESIGNER:	_ (-)
SHEET	43 of 43
Drawing Number:	SS1

City Of Redwood

ACCEPTED BY: _____ R.C.E. EXP. DATE

ACCEPTED BY: _____ CITY ENGINEER R.C.E. EXP. DATE